HYDRAULICS

TECHNICAL PRINCIPLES

PRODUCTS

HYDRAULICS

Merkel hydraulic components are suitable for a wide range of applications in hydraulics, for both light-duty and heavy-duty applications.
Freudenberg Sealing Technologies (FST) offers a complete range of standard solutions and also special solutions customised for particular applications. The range includes seals, wipers and guide rings.
The latest production technology guarantees the fastest possible availability. Even in less than 24 hours with Merkel Xpress.

REQUIREMENTS

Operational reliability under different extreme loads such as:

- High temperature fluctuations
- Irregular duty cycles and maintenance
- High lateral forces and deflections
- Very dirty conditions
- High system pressures and pressure peaks.

FEATURES

- Rod seals with high pressure resistance as primary or secondary seal
- Piston seals with integrated pressure activation grooves for high operational reliability with fast pressure changes
- Wipers with static sealing edge for reliable protection against ingress of dirt
- Guides with patented profiling ensure even distribution of stress
- Sealing rings for static sealing e.g. cylinder heads with end position damping
- Friction-optimised sealing systems with low stick-slip tendency
- Heavy-duty sealing systems with high operational reliability under shock pressures, high lateral forces and extreme temperatures
- Universal sealing systems for support cylinders with good static and dynamic tightness because of additional support edge and sealing edge.

APPLICATION AREAS

Merkel sealing components cover a wide range in modern hydraulics and are in use wherever safety and service requirements as well as costs are important.

USE OF HYDRAULIC SEALS

Different requirements and loads in numerous applications have resulted in the development of different seal designs.
Hydraulic seals can be categorised by function and design (→ Fig. 1).
Hydraulic seals are also classified into seals with a symmetrical cross-section and seals with an asymmetrical cross-section.

Asymmetrical seals are designed so the pre-load is distributed over the entire axial width on the supporting mating area to give them a sufficiently fixed seating in the groove. The correct pre-load on the moving side is not derived until after fitting in the housing (→ Fig. 2 and → Fig. 3).

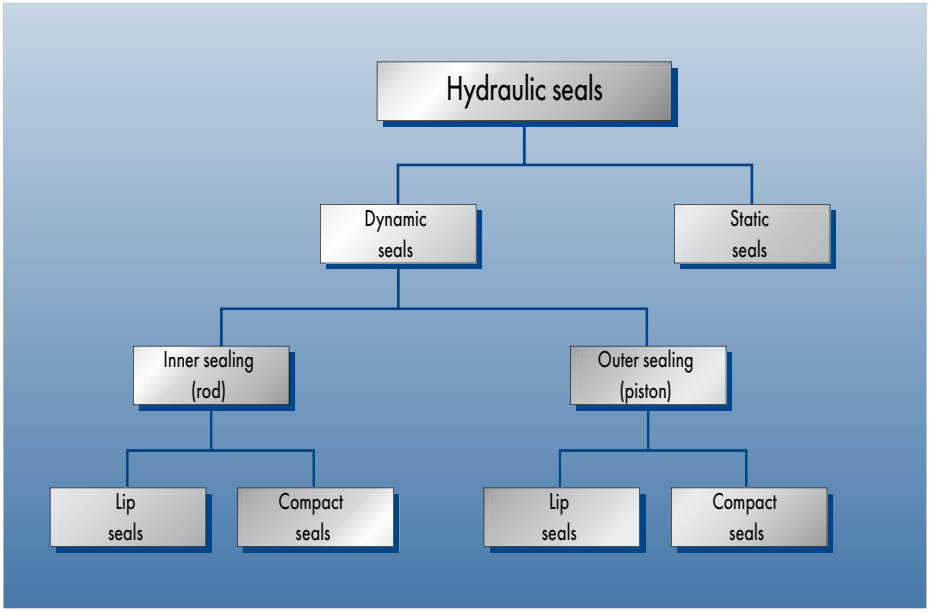

Fig. 1 Categorisation of hydraulic seals

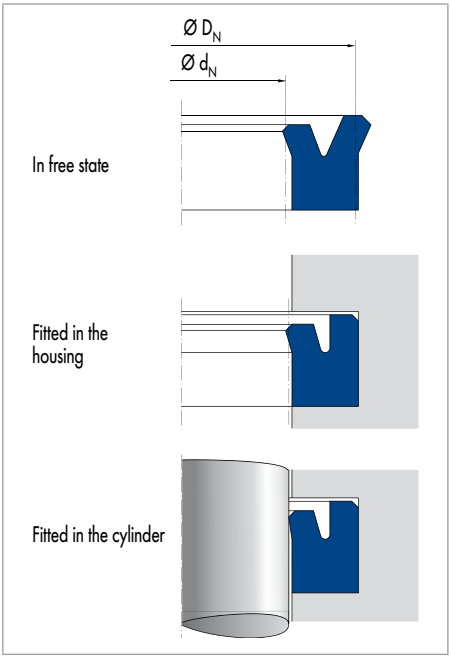

Fig. 2 Rod seal

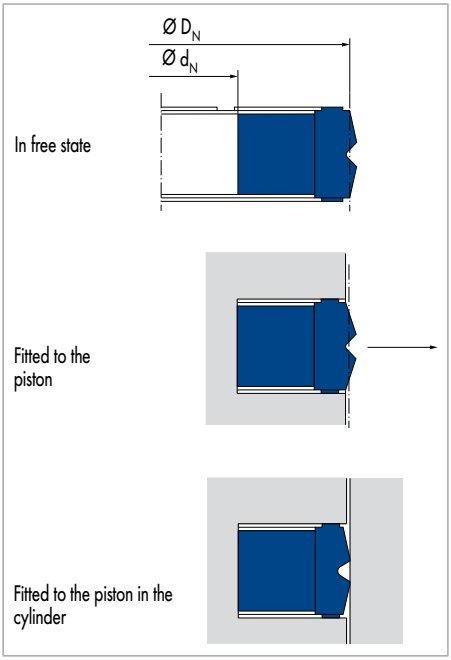

Fig. 3 Piston seal

HYDRAULIC SEALS/PRESELECTING SEALS

In addition to the main requirement for a good sealing effect, the user expects the following from hydraulic seals:

- Functional reliability
- Long service life
- Easy fitting
- Compatible with hydraulic fluid at high and low temperatures
- High resistance to mechanical damage (e.g. gap extrusion)
- Low friction
- Good shape elasticity to ensure correct function, even with eccentricity between rod and housing or piston and cylinder barrel caused by operation as well as the barrel widening as a result of the operating pressure.

The weighting of the requirements for the specific application in combination with the operating conditions (pressure, temperature, sliding speed etc.) are the decisive factors affecting the selection of the seal. Types of seals can be preselected in the hydraulic seals product selection. → Preselection of hydraulic seals page 214.

With reference to the operating conditions the usage limits specified there can be exceeded in some cases. In the case of extended duty cycles, operation subject to shocks or other severe operating conditions we recommend not exceeding all values simultaneously. Our technical consultants will be pleased to proved appropriate recommendations.

SEALING SYSTEMS

DEFINITION

Sealing components are used to retain the hydraulic medium securely inside a hydraulic system. A defined moistening of the counter surface with lubricating medium is desirable when the required service life is taken into account. A sealing component is referred to in this regard as leaky if the hydraulic medium is visible from the outside in the form of dripping leakage.

REQUIREMENTS

During operation sealing components are subject to a reciprocating or rotary movement when operating pressure is applied. In addition to other influences, the selection of a sealing component is significantly influenced by the material-dependent resistance against extrusion and the equally material-dependent friction and wear characteristics. The values of the main properties of sealing effect, form stability and friction or wear work against one another and in total cannot be optimally represented by one single sealing component. An approximation of the ideal sealing component is reached with a reasonable combination of single components with appropriate properties into one sealing system.

ARRANGEMENT

Sealing systems generally consist of an arrangement of sealing components with a primary seal, a secondary seal, a wiper and guide elements (→ Fig. 4). The properties of the individual components are optimised with reference to the main requirement.
The operating pressure is applied to the primary seal. The main requirement is a high resistance against extrusion simultaneously with acceptable friction values under high pressure. Compact sealing components with a slip ring of PTFE compound are primarily used inside sealing systems. The remaining oil film is comparatively thick and without additional reduction by a secondary sealing component (depending on the operating parameters) may be visible as dripping leakage in front of the wiper edge. The lower gap pressure (<5 MPa) is applied to the secondary seal. The main requirement is therefore effective reduction of the residual oil film left by the primary seal simultaneously with acceptable friction values in the lower pressure range. With sufficient media resistance U-rings of polyurethane or compact sealing components with a slip ring of polyurethane are generally used in this case. The sealing effect is better with such sealing components compared to PTFE sealing components.

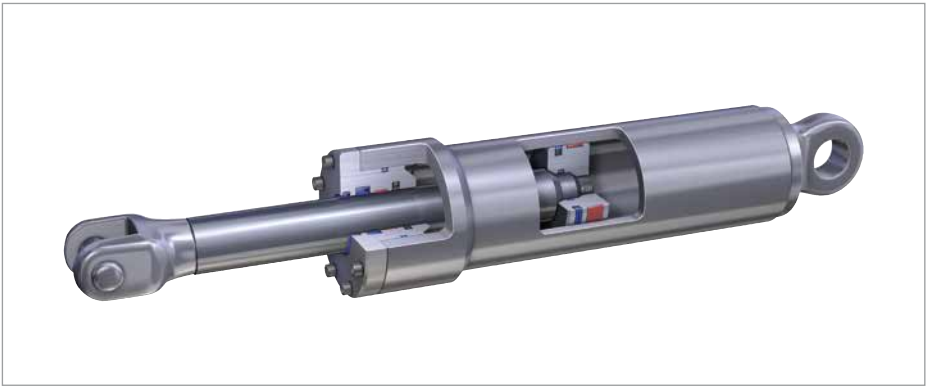

Fig. 4 Components in a sealing system

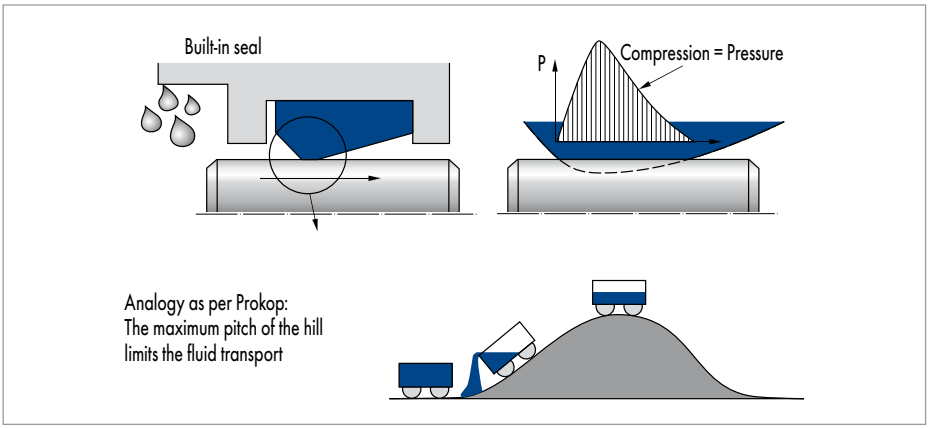

Fig. 5 Qualitative compression curve, single-acting rod seal

Depending on the requirements, wipers have different designs, such as single wiper or double wiper with extra sealing edge and are made of different materials. The outward aligned wiping edge keeps dirt from the environment outside the hydraulic system. A suitable design of the wiping edge (radius) ensures that the required lubricating film can be completely transported on the return stroke. The additional sealing edge increases the operating reliability of the sealing system when required. The use of guide elements enables a low-friction and low-wear relative movement between the moving components of the hydraulic cylinder.
The transverse loads occurring during operation are absorbed in a defined manner and prevent unwanted metal contact between the piston rod or the piston body and the surrounding housing components.

FUNCTION

To reduce friction and wear solid bodies that move relative to one another must be separated by a lubricating film. The oil film left beneath the seal must be completely transported back into the hydraulic system at every cycle. Inside a sealing system all individual seals and the wiper must meet these conditions.
The formation of the hydrodynamic lubricating film is influenced by the design of the sealing edge (pressure movement), the operating pressure and the magnitude and direction (extending or retracting) of the relative movement as well as by the structure of the counter surface (wettability) and the properties of the hydraulic medium (viscosity).

The pressure curve beneath the sealing edge is in general optimised in that a high wiping effect (steep pressure rise) is set at the pressure space and a good return capacity (flat pressure rise) is set from the return side (→ Fig. 5). Independently of the geometry of the sealing edge at low pressure, high stroke speed and long stroke a comparatively greater oil volume is released beneath the sealing edge than at high pressure, lower stroke speed and short stroke. In operation the primary seal releases a thin oil film into the gap area, which is reduced even more by the secondary seal. The excess oil is collected in the space between the primary seal and the secondary seal and returned to the oil compartment during retraction. A thin oil film coating the rod escapes outside under the wiper. Normally no medium is accumulated in the space between the secondary seal and the wiper in this process. The moistening is transported back into the system while the dirt remains outside. The sealing effect of a component is described by the ratio between wiping effect and return capacity. This value is variable depending on the operating conditions and is not a constant quantity.

GUIDE ELEMENTS

TASKS OF THE GUIDE ELEMENT

The use of guide elements enables a low-friction and low-wear relative movement between the movable components of the hydraulic cylinder. The transverse loads occurring in operation are accepted in a defined manner and unwanted metal contact between the piston rod or the piston body and the surrounding housing components is prevented.

CONTACT CONDITIONS

As a result of the guide play and the elastic deformation of the components under load (deflection of the guide element; bending of the shaft), an angular deviation develops between the piston rod or the piston body and the counter surface (→ Fig. 6). Calculation of the transverse forces and the probability of collision on the basis of idealised contact conditions with parallel axes results in incorrect results. Excessive tension peaks in the edge area of the guide element (edge break) are not taken into consideration here nor is the distance between the metal components (metal contact), which changes with the incorrect position, and the changed force initialisation. Depending on the type of guide, the result of an idealised observation in this regard must be evaluated differently.

GUIDE ELEMENTS

Particularly when a high transverse load is expected many users install traditional flat parallel metal plain bearings. Flat parallel metal guides are subject to marked tension peaks as a result of the phase displacement position (→ Fig. 7).
The permissible value of the surface pressure is reached at a comparatively low transverse load and simultaneous minimum deflection. In the pressure zone there is insufficient lubrication. At low sliding speeds stick-slip may be experienced simultaneously with a high load on the counter surface (running-in). If the transverse load in the limit range is suddenly applied, a breakage of the edge in the region of the guide is likely.

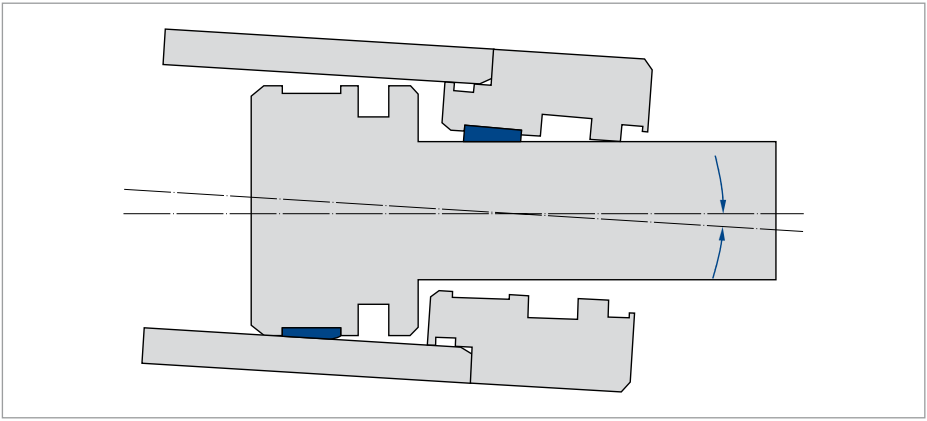

Fig. 6 Phase displacement position

The tension increase in the area of the supporting edge is reduced by the use of flat parallel guide sleeves of composite fabric materials (fabric-base laminate) (→ Fig. 8). The elastic support of the fabric-base laminate guide increases the support length of the guide ring and with it the maximum transverse load compared to the metal guide. The collision test becomes very important as a result of the elastic support of the guide sleeve. Guide sleeves are comparatively more economical.

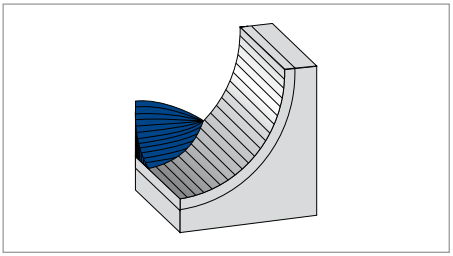

Fig. 7 Metal guide ring

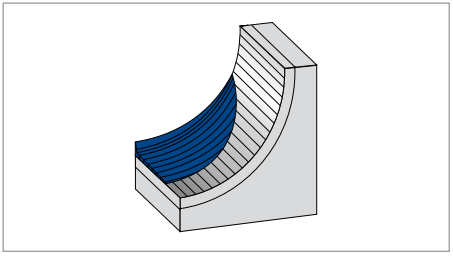

Fig. 8 Guide ring of fabric-base laminate

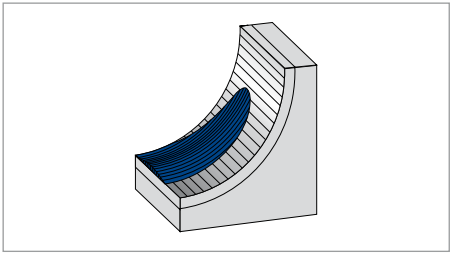

Fig. 9 Guide ring with convex profiling

The patented Guivex geometry for fabric-base laminate guide rings has been developed for reduction of the tension increase in the edge region. The zone with the highest compression, even when the phase displacement position is taken into account, is defined by the profiling approximately in the centre of the bush (→ Fig. 9). The compression is reduced on both sides and makes the ingress of the lubricating medium easier. The elastic support of the fabric-base laminate guide sleeve is simultaneously optimally used over the entire available width of the guide sleeve. Insufficient lubrication and edge breakage are virtually impossible.

Guide belts of PTFE compound have a subordinate role as guide elements for taking up transverse loads in hydraulics. The value for the permissible surface pressure is significantly lower in comparison and with a simultaneous significant temperature dependency. The advantages of guide elements of this type become clear when comparing the costs of large orders.

GUIDE WIDTH

In addition to the geometric consideration (external force application, distance between mountings, angular deviation, guide play, ...) must be considered when calculating the transverse load applied in the area of the guide element and also the elastic deformation of all components involved (deflection of the guide element, bending of the piston rod, stretching of the cylinder...). A detailed scrutiny is often neglected because it can only be done with complex means such as an FE calculation(→ FEM page 973).

A realistic estimate of the transverse load must pay particular attention to the limits of the mechanical loading of the metal components. In the case if long slender cylinders the permissible transverse load is limited by the bending strength of the piston rod and other factors. The classical assumption that about 10% of the hydraulic force is applied as a transverse load would in reality result in bending the piston rod in many cases.

If the magnitude of the normal force applied in the area of the guide element is defined, the minimum required guide width (H) can be specified (→ Fig. 10).

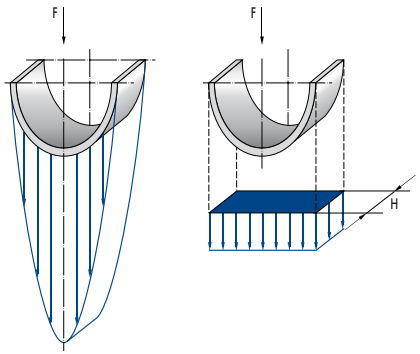

F = P x A; A = d x H; H = F / (d x P)
H = guide strip width [mm]
F = transverse load [N]
A = projected area [mm²]
P = permissible surface pressure [N/mm²]
d = nominal diameter of rod or piston [mm]

Fig. 10 Guide width

The permissible specific surface pressure in the specified form is a manageable calculation value with reference to the projected area and does not represent the material characteristics. In the definition of the permissible specific surface pressure the non-linear pressure curve over the contact range, the tension increase in the edge area of the guide rings and a phase displacement position are all considered. When considering the specified values of the permissible specific surface pressure (P) of the guide sleeve it must be noted in comparison that some manufacturers include extra safety factors in some cases. However, that does not bring any increase in safety into the result of the calculation, because this factor is returned to the associated equation.

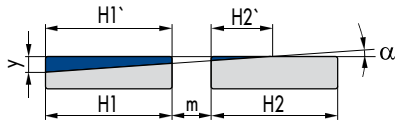

H = H1 + H2 H` = H1`+ H2`

Fig. 11 Usable guide width

Metallic contacts between housing components and the counter surface are unwanted. The maximum permissible deflection (y) of the guide ring is limited by the smallest metal gap inside the sealing system, in general the metal step behind the primary seal.

Depending on the phase displacement position (α) of the piston rod and the possible deflection (y) with reference to all influencing quantities, the usable guide width is reduced compared to the geometrically total width of the guide belts (H). Only the guide width actually in contact (H') contributes to holding the load.

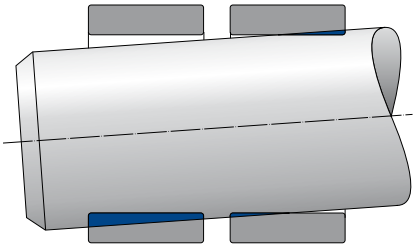

Fig. 12 Bilateral contact

In the case of large phase displacement positions, such as occur in relation to the compliance with long-slender cylinders, the guide ring may contact the counter surface on both sides of the centre axis. Here low tolerance levels favour contact on both sides. The additional contact generates a usable counteracting force but also stick-slip effects (jamming) as a result of distortion. In this case the collision check has particular significance. To select the optimum width of the guide the desired service life must also be considered. Limit values are taken into account in the calculation of the minimum required guide width and also with reference to the permissible surface pressure of the guide elements. Guide elements

that are primarily traversed in the range of the maximum possible load have a service life in the lower part of the range. Whether reducing the load by selecting a wider guide is useful in some cases depends on the previously considered safety factors as well as the total loading.

SPECIFIC COMPRESSION PER UNIT AREA

The permissible surface pressure (dynamic) is specified at a value in the range of 17 to 25 N/mm² for the copper-tin and copper-tin-lead bronze and high-load resistant copper-zinc alloys used in the area of the metal plain bearings. High-tensile alloys with values over 25 N/mm² are only used for the edge load of non-critical applications in connection with high-tensile counter surfaces.

Guide rings of fabric-laminated materials (fabric-base laminate) have improved function compared to straight metal guides. As a result of the low tension increase in the edge area and the elastic properties of these materials a higher surface pressure can be accepted. The value of the surface pressure and the characteristics under higher operating temperatures is greatly influenced by the composition of the fabric-based laminated material. Polyester and other plastics and also natural materials such as cotton are used in the area of fine fabrics. Polyester, vinyl ester and phenolic resin and also a whole range of plastics with different properties are available for the resin matrix. While some of these compounds show significant thermoplastic characteristics, the factor of the operating temperature on the permissible surface pressure is low for others.

The values for the permissible specific surface pressure depending on the operating temperature can be found in the tables in the description of the article.
Under load guide elements show a deformation in the elastic range (reversible). The magnitude of the de- formation or deflection (y) is determined directly by the material characteristics, the thickness of the guide sleeve and the magnitude of the load. Assuming similar material characteristics, thicker guide sleeves have softer springing under identical loading. Pressure can only be applied to the guide element at the magnitude of the permissible surface pressure if the associated deflection of the guide element (→ Fig. 13) can be achieved without metal contact.

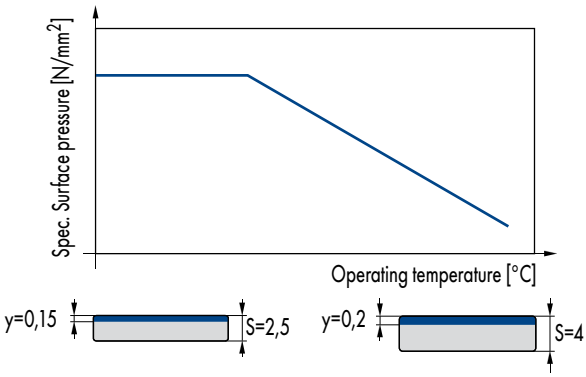

Fig. 13 Deflection at maximum surface pressure

In a sealing system the collision check is generally conducted with reference to the metal gap on the side of the primary seal away from the pressure. The minimum permissible magnitude of the sealing gap is determined by the deflection of the guide element. The maximum permissible magnitude of the sealing gap is determined by the form stability of the sealing component. General specifications for the maximum admissible gap width depending on the type of seal, the selected seal profile and the operating pressure can be found in the tables in the description of the article. There is a direct geometrical dependency between the minimum required metal gap (x3) and the maximum permissible extrusion gap (x2) (→ Fig. 14). The gap dimensions can therefore not be calculated independently of each other. As a result guide elements cannot be subjected to the maximum permissible surface pressure at every pressure stage and with all types of seals, because the minimum required metal gap is not sufficient for complete deflection.

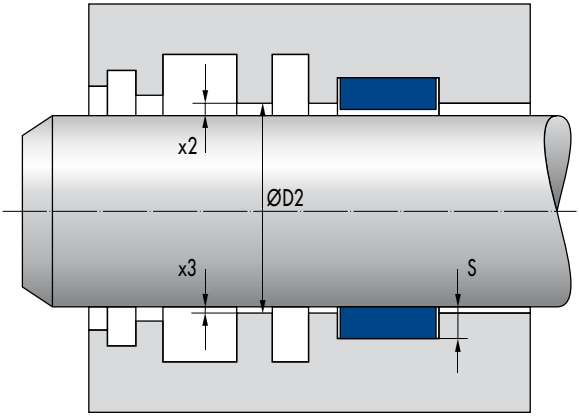

Fig. 14 Sealing gap

SEALING MECHANISM AND INFLUENCING QUANTITIES

TIGHTNESS, FRICTION, WEAR

General

Hydraulic drives are used in many machines and systems because of their varied options for use. Major areas of application are:

- Machines and systems engineering
- Construction machinery
- Agricultural machinery and
- Mining machinery.

The most important component for generating the linear drive movement is the hydraulic cylinder. The function and reliability of hydraulically driven machines depends greatly on the seals installed in the hydraulic cylinder.

Static tightness

At rest all elastic hydraulic seals are tight because of the excessive initial compression p_v. The sealing pressure p is superimposed on the initial compression p_v. The compression in the sealing area p_d is therefore always greater than the sealing pressure (→ Fig. 15).

[1] $p_d = p_v + p$

Formation of the lubrication film

Under movement the sliding surface coated with fluid is pulled under the contact area of the seal. The seal acts as a wiper, but is not able to wipe away the fluid completely.

The sliding movement causes a delayed flow and the seal is lifted from the sliding surface by the hydrodynamic pressure build-up. A thin film of fluid remains on the sliding surface behind the seal.

The thickness h of the following fluid film depends on the maximum pitch of the compression curve $\left(\frac{dp}{dx}\right)_{max}$ on the entry side of the fluid in the sealing gap, the dynamic viscosity η of the fluid and the relative speed v between the seal and the sliding surface.

[2] $h \sim \sqrt{\frac{\eta \cdot v}{\left(\frac{dp}{dx}\right)_{max}}}$

If the fluid film is completely returned to the pressure space on the return stroke, this is referred to as dynamic tightness.

Friction

The friction of hydraulic seals is primarily influenced by the thickness of the lubricating film between the seal and sliding surface.

Three friction states may be encountered.

- Static friction
  (dry solid-body friction)
- Dry-fluid friction
  (solid-body friction and fluid friction)
- Fluid friction
  (no solid-body contact).

The three areas can be shown in the Stribeck graph (→ Fig. 16).

The high static friction must be overcome first during approach. With increasing speed more fluid is pulled between the seal and the sliding surface and the direct contact area decreases. Then the static friction initially decreases markedly.

The range of fluid friction is reached as the speed continues to increase. The static friction increases again as the speed increases. The static friction is caused exclusively by the shear stresses τ in the fluid in the range of hydrodynamic lubrication.

[3] $\tau = \eta \cdot \frac{dv}{dh}$

Wear

The wear on hydraulic seals depends on the thickness of the lubricating film or the friction status.
Most seals operate in the region of dry-fluid friction and are subject to continuous wear.

Static tightness
p = 0
v = 0

Contact pressure distribution as a result of initial compression

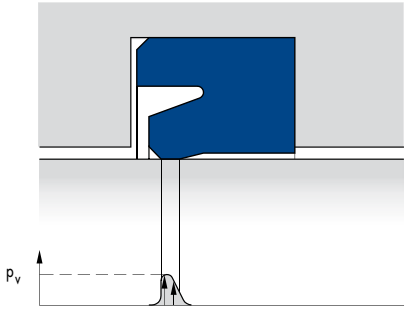

Static tightness
p > 0
v = 0

Contact pressure distribution as a result of initial compression and pressure to be sealed

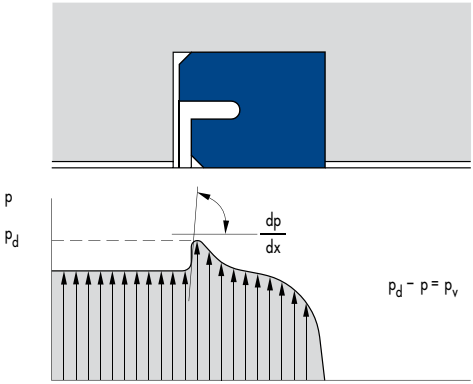

Hydrodynamic formation of lubricating film
p > 0
v > 0

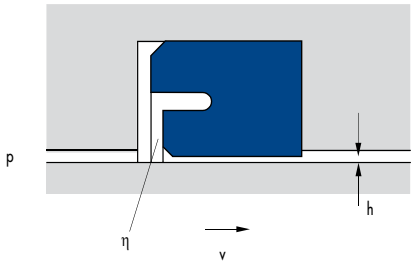

Fig. 15 Compression curve and hydrodynamic lubrication film formation

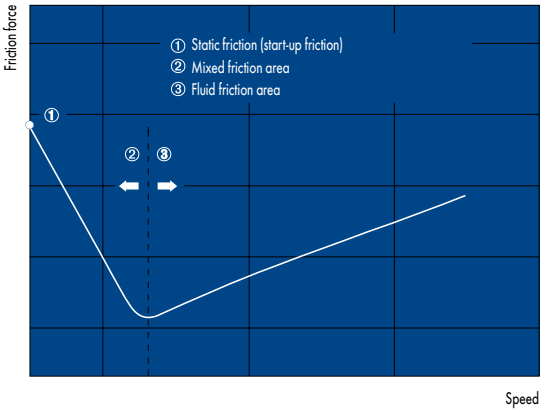

Fig. 16 Stribeck graph

Apart from the operating conditions of pressure, temperature and speed the wear depends primarily on the material properties, the surfaces of the sliding components and the lubricating properties of the hydraulic fluid. Air in the hydraulic fluid and contamination by foreign bodies also influence the wear.

PHYSICAL AND CHEMICAL INFLUENCES

Operating pressure

The system pressure with the size of the cylinder determines its lifting force. It is the first factor to be considered when selecting the seal and the hardness of the seal material. According to the CETOP recommendation standard cylinders are designed for the two pressure stages of 16 MPa (160 bar) and 25 MPa (250 bar). The majority of all hydraulic cylinders operates with these pressures. Higher system pressures up to 40 MPa (400 bar) are now the rule in mining and heavy-duty mobile hydraulics. with the availability of existing seal types.

During operation of the hydraulic cylinders the sealing components are under continuously changing pressure. In addition, short-term pressure peaks caused by external influences are frequently encountered, particularly in mobile hydraulics. These shock loads can reach several times the magnitude of the system pressure and place high demands on the sealing components. These loads must be taken into account when selecting the seal.

Drag pressure

When the fitting tolerances are restricted in the space between the guide and the seal the guide generates hydrodynamic pressure. The cause of this is the hydrodynamic drag flow, which depends on the dynamic viscosity of the medium, the gap width h_s the speed v and the length l of the guide (→ Fig. 17).

The pressure increase in the guide is calculated as follows

$$[4] \quad \Delta p = p_1 - p = \frac{6 \cdot \eta \cdot v \cdot l}{h_s^2}$$

To prevent hydrodynamic pressure build-up, return ducts are required to compensate pressure in metal guides. Otherwise the seal will be destroyed early in its life by the high pressure (→ Fig. 18). The return ducts are preferably designed as a spiral groove with a cross-section greater than the largest gap ring area (→ Fig. 19). Axial pressure compensation holes should be avoided, because the spray effect of the fluid contributes to the destruction of the seal.

When using guide belts and guide rings of plastic return ducts are already available in the form of the joint gap (→ Fig. 19).

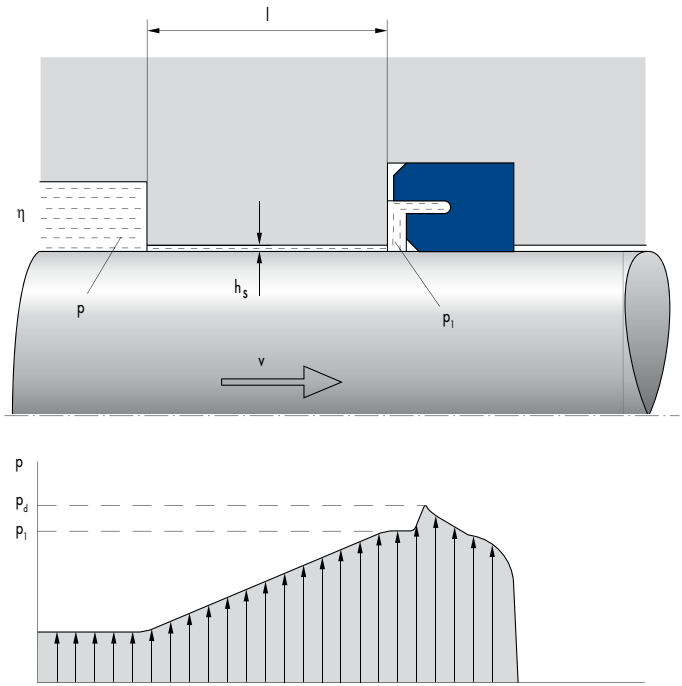

Fig. 17 Hydrodynamic drag pressure

Speed

The speed between the seal and the moving counter surface for rubber and polyurethane materials is normally 0,1 m/s to 0,5 m/s. However, the deciding factor is the application. For example, 0,8 m/s can be approved for the Merkel U-Ring T 20 as secondary seal and the same for the Merkel Compact Seal Simko 300 at a pressure of 250 bar. Up to 5 m/s is permissible for PTFE materials.

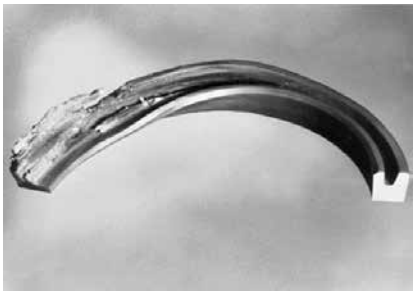

Fig. 18 U-ring destroyed by hydrodynamic pressure build-up

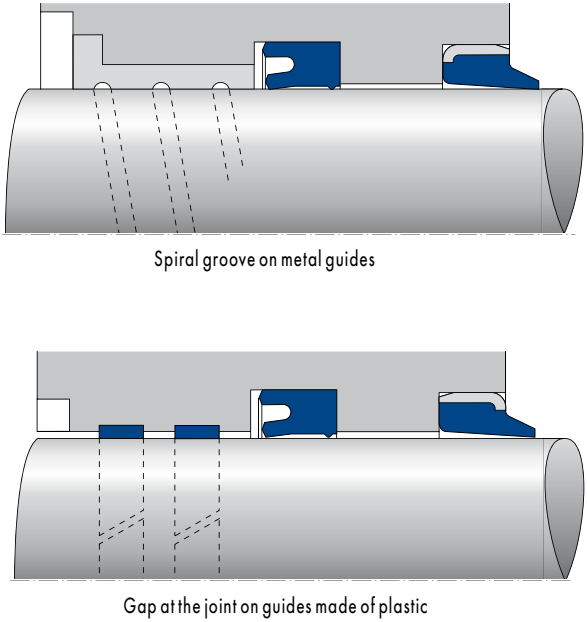

Fig. 19 Design measures for preventing drag pressure

The formation of a lubricant film and friction depend on the speed to a large degree. The friction force decreases greatly in the range of 0,05 m/s and lower. Particularly at high temperatures stick slip may occur. This juddering motion is a continuous repetition of stick and slip between seal and counter surface.
Materials with lower coefficients of friction are used to prevent this (e.g. PTFE).

Temperature

The temperature of the hydraulic medium and the ambient temperature influence the material configuration. The optimum temperature for the function of the seals and the stability of the oil is +40 °C to +50 °C. The temperature at the sealing lip is significantly higher than the oil temperature because of the friction.
The usual temperature during operation of the hydraulic cylinder is +80 °C, in extreme cases it may be up to 110 °C.

With increasing temperature the seal material becomes more elastic and loses form stability. For this reason we recommend running-in seals at lower temperatures (80 °C) if the temperature limit of 110 °C will be common for our polyurethane materials. If temperatures over 110 °C are expected, it will be necessary to use special materials (e.g. FKM, PTFE/FKM). At lower temperatures the hardness of the seal materials will be increased. The seal will lose elasticity. However, the simultaneous increase in oil viscosity will leave the functional reliability of the seals virtually uninfluenced. In the temperature range down to −40 °C cold-resistant materials based on NBR have proven reliable.
As previously noted, the temperature has a great influence on the physical properties of elastic rubber materials.
The "torsion vibration test" graph (→ Fig. 20) shows how the dynamic thrust module G depends on the temperature (thrust module measured in the torsion vibration test according to DIN 53 520). The elastic rubber range with a virtually constant module can be recognised from right to left, then a steep rise to the

transition range and finally the glass state region, in which the rubber is hard and brittle, with a virtually constant module.
When the temperature rises again the cold brittleness disappears again. This means that the freezing process is reversible. The transition from elastic rubber to the glass state region is particularly important is particularly important because in many cases it represents the limit of operation at low temperatures. This transition is not sudden but extends over a specific region, as shown in the "torsion vibration test" graph.

The region of transition from the elastic rubber region to the glass state is characterised by the glass transition temperature $T_{ü}$ (temperature of the maximum of the logarithmic damping decrement Λ). However, this value can only represent a general dimension for the low-temperature operation limit of the material, because in practical application of an elastomer component it depends completely on the type of load involved.

The same material will reach its load limit at a higher temperature under shock load than, for example, with slow elongation. The torsion vibration test can be used to distinguish among different materials, but in practice the temperature limit must be tested in operation with the various components.

Example:

Friction resulting from movements generates heat in the case of contact seals. At temperatures at which there is a danger of hardening by freezing the frictional heat may be sufficient to maintain the elasticity of the seal or to place it in a functional condition sufficiently quickly after the movement has started. The behaviour under cold conditions is therefore only ever worth testing in the form of a material comparison in connection with experience of the technical application.

For further information → General technical data and materials from page 897.

Hydraulic media

In hydraulics various hydraulic fluids are used to transmit the energy from the pump to the cylinder. The most important and most frequently used Die hydraulic fluid is mineral oil.

The lubricating capacity of the oil is decisive for the wear of the moving parts. The lubricating capacity is influenced by the viscosity and additives that improve the lubrication.

Hydraulic oils are classified in viscosity classes in accordance with DIN ISO 51519 to identify the viscosity. The criterion for the categorisation is the nominal viscosity at the reference temperature of +40 °C.

The viscosity of hydraulic oils depends on the pressure and the temperature. The viscosity increases significantly from a pressure of about 20 MPa (200 bar). The viscosity doubles at approximately 40 MPa (400 bar) depending on the nominal viscosity and the temperature. Under an increasing temperature the viscosity of oils decreases very rapidly. The characteristic value for this viscosity-temperature behaviour is the viscosity index (VI). The higher the viscosity index of a hydraulic oil the less the viscosity depends on the temperature (→ Fig. 21).

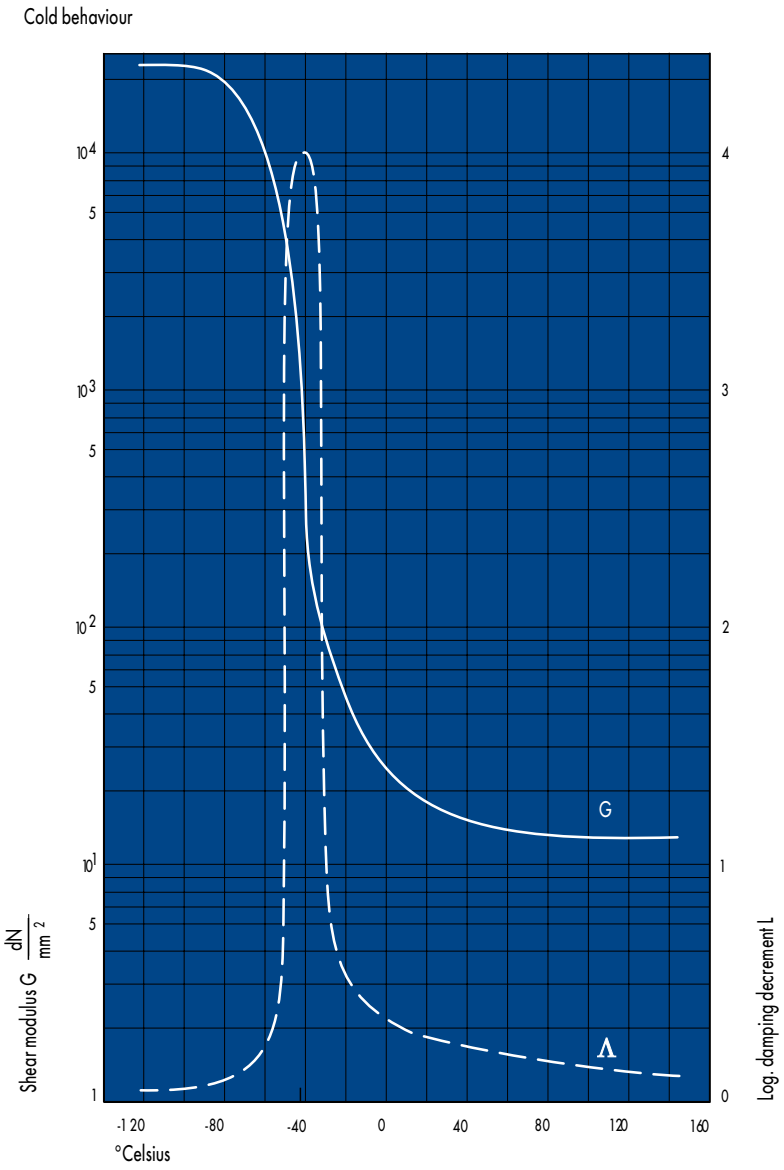

Fig. 20 Graph: torsion vibration test in accordance with DIN 53445;
dynamic shear modulus G and logarithmic decrement Λ of a FST material based on CR

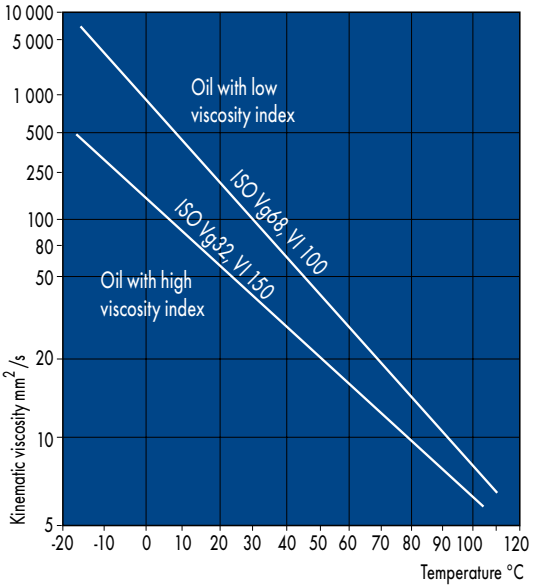

Fig. 21 Viscosity-temperature behaviour of various hydraulic oils

Hydraulic oils are classified into different groups:

- Hydraulic fluids based on mineral oils (→ Tbl. 1)
- Biologically degradable hydraulic fluids (→ Tbl. 2).

Apart from the mineral oils, in recent times so-called environmentally compatible hydraulic fluids have come into use. In this regard a distinction is made between hydraulic fluids based on vegetable oils (HETG), polyglycol fluids (HEPG) and synthetic ester fluids (HEES). The standard materials are not guaranteed to be compatible with these hydraulic fluids in all applications. Special materials such as the polyurethane material Simritan 94 AU 955 have been specially developed for use in these fluids. In some cases engine oil /HD) is used in travelling hydraulic oil systems, with the advantage that only one type of oil is required for the entire vehicle.

For specific purposes, such as in aircraft and in mining, fluids based on mineral oils cannot be used because of the danger of fire. Fire-retardant fluids are used for these applications (→ Tbl. 3).

Categorisation in accordance with DIN	Categorisation of hydraulic oils in accordance with the ISO proposal	Identification/ properties	Application
H	HH	Mineral oil without active additives	is virtually never used today
H-L	HL	corrosion-prevention additives and additives for increasing ageing resistance	for lightly loaded systems
H-LP	HM	like H-L, as well as wear-reducing additives and additives for increasing loading	for heavily loaded systems
H-LPD	–	like H-LP, as well as detergent and dispersive additives	for heavily loaded systems when there is danger of water ingress during oil filling
H-V	HV	like H-LP, as well as improved viscosity-temperature behaviour	systems that are used at low or very variable temperatures

Tbl. 1 Hydraulic fluids based in mineral oil

Classification in accordance with DIN proposal	Base fluid
HEPG	Polyglycol
HETG	Vegetable oil
HEEG	Fully synthetic ester

Tbl. 2 Biologically degradable hydraulic fluids

Group	Composition/water content	Application temperature range	Kinematic viscosity at +40 °C	Application
Hydraulic fluids containing water				
HFA E	Emulsions of mineral oil in water, water content >80% (generally 95%)	−+5 ... +60 °C	0,5 ... 2 mm^2/s	mining, hydraulic presses, hydrostatic drives with low operating pressures
HFA S	Synthetic oil in aqueous solution, water content >80% (generally 95%)			
HFB	Emulsions of water in mineral oil, water content >40%	−+5 ... +60 °C	non-Newtonian fluid	not in use in Germany
HFC	aqueous polymer solutions, water content >35%	−30 ... +60 °C	20 ... 70 mm^2/s	Hydrostatic drives with low operating pressures
Non-aqueous hydraulic fluids				
HFD R	based on phosphoric acid ester	−30 ... +150 °C	10 ... 50 mm^2/s	not approved for use in German coal mines
HFD S	Based on chlorinated hydrocarbons hydrodynamic couplings up to 150 °C			
HFD T	Mixtures of HFD R and HFD S			
HFD U	Synthetic fluids of other composition approved			

Tbl. 3 Fire-retardant fluids

Because of the large and somewhat confusing selection of media with different and varying additives, the above usage limits can only be considered recommended values. We recommend testing for individual cases

VDMA Directive 24317 lists the properties and identification of these fluids.
DIN 24320 specifies the properties of HFA fluids.
Of the fire-retardant fluids it is primarily the HFA fluids that have become established in mining. HFB and HFD fluids are only used in exceptional cases.

Contamination in oil circulation

Hydraulic oils can be contaminated by foreign bodies such as sand, metal abrasion, metal shavings and oxidation products (ageing of the oil by the action of high temperatures and oxygen).If the oil is insufficiently filtered the seal the other components in the hydraulic system may not operate correctly. Metal shavings and abrasive grains of sand will cause failure of the seal as soon as these particles enter the area beneath the sealing edge.

Air in oil

There are dissolved air molecules in all classes of hydraulic fluids. This air dissolved in the oil does not affect the function of the seal. Hydraulic oil can form a molecular bond to more as the pressure increases. Then when the pressure is reduced the dissolved air comes out of solution. Air bubbles form, which frequently collect in the groove spaces not filled by the seals.

If the pressure is suddenly increased, the air-oil mixture is heated so strongly that compression ignition may occur. This phenomenon, referred to as diesel effect, may destroy the seal if it occurs frequently. The seal may also be damaged by undissolved air during the movement.

The air bubbles dragged in with the oil between the seal and the counter surface expand more the closer they come to the non-pressurised side of the seal. This air-bubble erosion causes longitudinal scores in the surface of the seal. This results in further destruction of the seal by washing out and removal of surface areas by the flowing fluid (flow erosion).

The damage caused by air in the oil can be greatly reduced if the complete hydraulic system is carefully bled before operation.

GEOMETRICAL INFLUENCES

Stroke

The stroke of the working cylinder is mostly between 0,1 m and 1,0 m. When the strokes are very short, only a few centimetres, and the load frequency is high, the required lubricating film will not be formed and seals of rubber materials may be subject to increased wear.

In such cases sealing components of PTFE are preferably used. If the strokes are long, in the range of several metres, there is a danger that the sealing component will be excessively heated. Distortions of the shape of the rod, different surface roughness and eccentricity occur more frequently with long strokes.

Housings

The following criteria are used to specify the housings and thus the dimensions of the seal:

- Use and load type of cylinder
- Standard seal or special seal
- Standardised housings.

The greater the load on the seal the stronger the profile. With equivalent seal diameter seals of smaller radial thickness are more likely to be damaged and to wear. The same percentage radial oversize the absolute oversize (in millimetres) of a seal with a smaller radial thickness is less than a seal with larger radial thickness.
A seal with a stronger profile is better able to bridge large eccentricities resulting from the guide play.

The dimensions listed in the catalogue are available immediately from stocks or are articles that can be delivered at short notice, which have been used successfully for years for sealing pistons and piston rods. The dimensions are marked accordingly when they match the dimensions specified by the standard.

The housings for rod and piston seals are specified in DIN ISO 5597.
DIN ISO 6547 contains the housings for piston seals with integrated guide elements.
DIN ISO 6195 governs the housing for wipers.
ISO Standard 7425 specifies compact seals, consisting of one slip ring of PTFE and an elastic compression ring.

SEALING GAP

DEFINITION

The sealing gap is defined as the gap bordered by the counter surface and the housing on the pressurised side of the seal. Because of the different general conditions the primary and secondary seals of a sealing system considered separately with reference to the sealing gap.

$x2 = (D2_{max} - d_{min}) / 2 + xf_{max} / 2$

$x3 = (D2 - [DF_{max} - (2^* S_{min})]) /2$

$xf_{max} = [DF_{max} - (2^* S_{min})] - d_{min}$

$D2_{max} = d_{min} + 2 \times 2 - xf_{max}$

d = shaft [mm]
DF = groove base of guide [mm]
D2 = non-pressurised side [mm]
S = thickness guide sleeves [mm]

x2 = maximum sealing gap [mm]
x3 = minimum sealing gap [mm]
xf = guide play [mm]

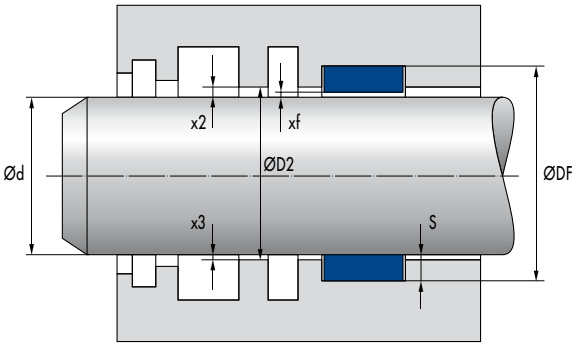

Fig. 22 Limit values of sealing gap of rod sealing system

LIMIT VALUES

When considering the limit values with reference to the sealing gap the maximum adjustable sealing gap (x2) and the minimum sealing gap (x3) with one-sided mount of the piston rod or the piston body are taken into account (→ Fig. 22 and Fig. 23).

$x2 = (D2_{max} - d2_{min}) / 2 + xf_{max} / 2$

$x3 = ([dF_{min} + (2^* S_{min})] - d2_{max}) /2$

$xf_{max} = D_{max} - [dF_{min} + (2^* S_{min})]$

$d2_{min} = D2_{max} + xf_{max} - 2 \times 2_{max}$

d = bore [mm]
DF = groove base of guide [mm]
D2 = non-pressurised side [mm]
S = thickness guide sleeves [mm]

x2 = maximum sealing gap [mm]
x3 = minimum sealing gap [mm]
xf = guide play [mm]

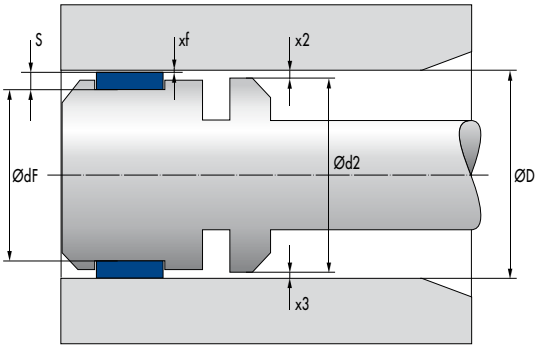

Fig. 23 Limit values of sealing gap of piston sealing system

The maximum sealing gap (x2) should be as small as possible (gap extrusion), the minimum sealing gap (x3) should be as large as possible (metal contact). Because there is a direct geometrical dependency between the minimum required metal gap (x3) and the maximum permissible extrusion gap (x2), the gap dimensions cannot be set independently of each other.

GAP EXTRUSION

Seal materials act like a viscous fluid under the influence of the operating pressure. When the pressure is applied the sealing component is pressed closer to the metal housing and to the sealing gap. The ingress of the seal material into the sealing gap is referred to as the gap extrusion. The sealing component is damaged in the area of the metal edge of the installation space by the ingress of the seal material into the sealing gap. The repeated damage eventually causes failure of the sealing component.

When specifying the maximum gap dimension (x2) the temperature, material and geometry-dependent form stability of the sealing component and the operating and general conditions must be considered. In addition to the clear connection between the form stability of a sealing component and the operating pressure or the operating temperature, the limit values for the sealing gap are determined by the total loading, as well as other things.
The pressure applied with simultaneous relative stroke movement in the direction of the extrusion gap is more demanding than a static or quasi-static seal with reference to the power consumed by friction and shearing forces in the contact zone. A short pressure pulse is uncritical with reference to the gap extrusion, but an extended application of pressure places increased demands on the long-term form stability of the sealing component (flow).

The relevant enlargement of the sealing gap as a result of the cylinder stretching (cylinder barrel) or cylinder buckling (hollow rods) must be considered, particularly with higher operating pressures or light design. The deflection of the guide element must also be considered borderline designs with high transverse loads.

General figures for the maximum admissible gap width (x2) are listed in the tables with the article description depending on the type of seal, the selected seal profile and the operating pressure.

METAL CONTACT

When specifying the minimum gap dimension (x3), the collision control is particularly important. The narrowest sealing gap in a sealing system is normally behind the primary seal. Collision control is therefore run primarily for this area. Where the design requires large gaps between the sealing components and also large angular deviations the collision control should be extended appropriately.

Marginal designs with high transverse loads and long slender cylinders must also be protected with reference to bending of the piston rod and the deflection of the guide element. Cylinders with short support length are tested for the required angular error.

Metal contacts between the counter surface and the installation space components cause comparatively high costs when service is required. Within the permissible limits and with reference to the operating and general conditions the dimensions and tolerances are selected to yield as large a value as possible for the sealing gap x3 and thus the greatest possible security against metal contacts. The minimum required value for x3 is determined primarily by the deflection of the guide element under load (see additional information on guide elements).

COUNTER SURFACE

DEFINITION

Both sides are subject to wear at the contact and during simultaneous relative movement between the sealing components and the counter surface. To establish a stable sealing effect over the long term, the changes caused by the contact must be minor. After a short running period during which the sealing edge must not be damaged by abrasive wear, stable running characteristics must established. The system consisting of sealing components, counter surface and lubricating film must be optimised for sealing effect, friction behaviour and wear. The geometry, the material of the sealing components, the topography, the material of counter surface and the properties of the hydraulic medium all influence the operation of the system.
The factor of individual parameters on the overall system is strongly dependent on the operating conditions. While the solid-body friction is the primary factor with a low stroke speed and high operating pressure, with a high stroke speed and low operating pressure a hydrodynamic lubricating film may be built up. The influence quantities are always mutually interdependent. In an optimally set up system a thin lubricating film is released outside beneath the sealing components. The oil film must be transported completely back to the hydraulic system at every cycle. Inside sealing systems all individual seals and the wiper must meet this condition.

An absolutely sealing component that does not release a lubricating film outside is as unsuitable as an absolutely smooth counter surface (→ Fig. 24) in which there are no abrasive components and also no lubricant pockets when considering the dependencies described above. In both cases a very unfavourable friction and wear behaviour will be established.

SURFACE STRUCTURE

The structure of the counter surface is primarily influenced by the machining process used for finishing. With reference to retaining the lubricating film it is better to generate chaotic surface structures. Dynamic effects are generated on aligned structures and in relation to the stroke movement in the area around the sealing edge. The applied lubricating film can be enlarged here and is visible as leakage. A surface generated by turning and grinding or honing cannot be accurately described geometrically. In turning the material is not sheared at the theoretical contour line, because during processing material particles are also pulled out from a depth. Geometrically undetermined cutters indentations and heights are also formed by grinding and honing (→ Fig. 25). A surface with formation of fine burrs is generated.

Fig. 24 Non-wettable surface

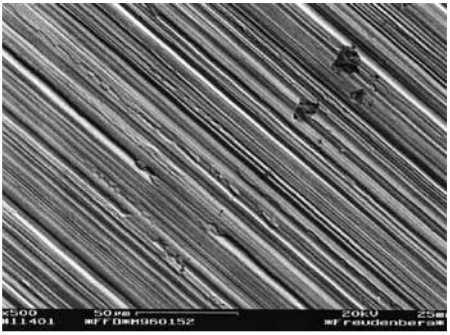

Fig. 25 Ground surface

Whether such a surface is suitable for use in contact with the sealing components cannot be sufficiently derived from the currently used surface parameters R_a, R_{max} and M_r. Depending on the general manufacturing conditions both abrasive and non-abrasive counter surfaces are created within the limit values. Processes that remove material for final machining are only suitable if the process can be managed. This requires a measured value for the abrasiveness.

When manufacturing processes for final machining are used in which material is not removed (e.g. rolling) comparatively smooth surfaces are generated, which do not normally have any abrasive components. Because it is difficult to wet a smooth surface, it is more difficult to form a lubricating film. However, such surfaces are generally suitable for a counter surface in contact with sealing components.

HARDNESS/COATING

The counter surface and the sealing and guide elements are in contact as a result of relative movement (friction) and compression (transverse load; operating pressure). The required hardness of the counter surface depends on the height and type of loading. Slow movements with high surface load (deformation of the counter surface) and rotary movements (running-in as a result of wear) are the most demanding.

The hardness of the surface generates sufficiently wear-resistant and stable edge coatings. However, the thickness of the edge coating and the quality of the base material are very important. If it is too soft, a comparatively thin edge coating will be deformed or broken with deflection of the base material. This effect can be observed particularly with hard chrome coatings on soft substrate material. The highest compression depends on the transverse load and the operating pressure in the region of the guide element or the primary sealing component. With complete deflection of an HGW guide ring and a correspondingly high transverse load maximum compressions of p_{max}~110N/mm² are reached. In the case of the sealing components the pressure distribution depends on the geometry of the sealing edge (→ Fig. 26). An operating pressure of 30 MPa a maximum compression of p_{max}~50N/mm² can be expected for the Merkel Omegat OMS-MR Rod Seal.

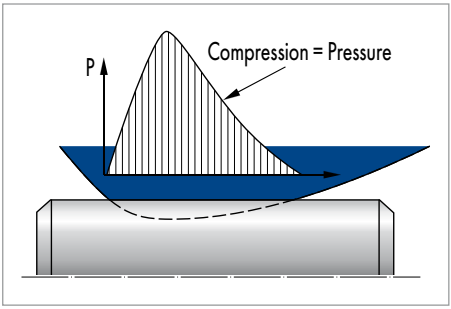

Fig. 26 Qualitative compression curve, single-acting rod seal

In the area of rod sealing systems base steel of quality Ck45N with a surface hardness of 55-60 HRC is used for cylinders under high loading. In general high-alloy, stainless steels based on CrMo or CrMoNi have proven reliable.

Piston sealing systems are under less load compared to rod sealing systems with reference to the compression curve (no pronounced sealing edge) and the lubrication. The counter surface in cylinder bores are not normally hardened. Under high loading high-alloy, stainless steels based on CrMo or CrMoNi (e.g. 42 CrMo4 + QT or 42 CrMo4V and 36 NiCrMo T + TQ) have proven reliable.

Nitrated counter surfaces

Nitration saturates the edge coating of the workpiece with nitrogen by diffusion. The result is a hard, wear-resistant and corrosion-resistant compound layer (thickness 10-20 µm). The hardness diminishes with increasing depth (diffusion coat). Depending on the process and the basic material a total penetration depth of up to 1 mm is reached. In salt-bath nitration (in a weaker form also with gas nitration) a large number of deep pores is formed in the outer compound layer. Even under a minor load (abrasive) particles tend to break out of the porous compound layer.

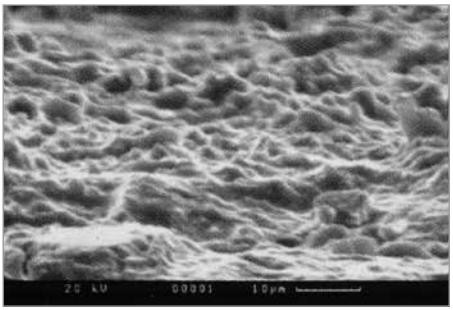

Fig. 27 Salt-bath-nitrated surface

A surface of this type cannot be used in contact with the sealing components without additional mechanical processing. Nitrated counter surfaces can be used in sealing technology without problems when they have been appropriately processed.

Chromed counter surfaces

Polished hard chrome layers (thickness 30-50 µm) do not generally have any abrasive component and, assuming a sufficiently hard substrate, are suitable for use as a counter surface in contact with the sealing components. Matt chroming forms microscopically small sharp tips, which cause heavy wear. Such surfaces must be mechanically processed before use in every case.

Ceramic and partially ceramic counter surfaces

When using ceramic and partially ceramic surface (total thickness 300 µm) corrosion protection (saltwater resistance) and wear resistance are the primary purpose.

Ceramic counter surfaces are not smoothed in contact with the sealing components. The contact with the permanently sharp-edged crystal structure causes high wear on the sealing components. Sealing systems for ceramic counter surfaces are designed with adapted seal materials and special seal layouts and as such have a special position.

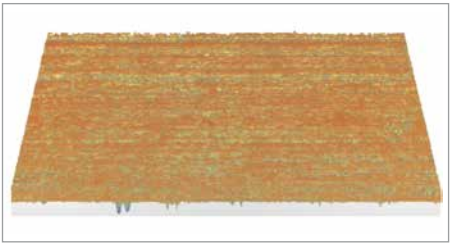

Fig. 28 Ceramic surface

In general brittle coatings would break with the elongation of the cylinder bores when pressure is applied. Therefore, in hydraulic cylinders only piston rods are coated.

DESCRIPTION OF COUNTER SURFACE MEASURABLE IN THE LABORATORY

To evaluate the counter surface a suitable roughness gauge is used to measure the surface parameters R_a (average roughness), R_{max} (maximum surface roughness) and M_r (material content) and compared to the specified limit values (→ Tbl. 4).

Surface quality		
Surface roughness	**R_{max}**	**R_a**
Sliding surface	≤2,5 µm	0,05 ... 0,3 µm (optimum R_a = 0,2 µm)
Groove base	≤6,3 µm	≤1,6 µm
Groove flanks	≤15,0 µm	≤3,0 µm
Material content M_r >50% to max 90% at cutting depth c = Rz/2 and reference line C ref = 0%. (optimum Mr = 80%)		

Tbl. 4 Surface parameters

The material content curve or Abbott curve (→ Fig. 29) is the graphic view of the material-filled proportion of the calculated profile with reference to the cutting depth.
The material content is derived from the Abbott curve.
The seal manufacturer uses different basic data.

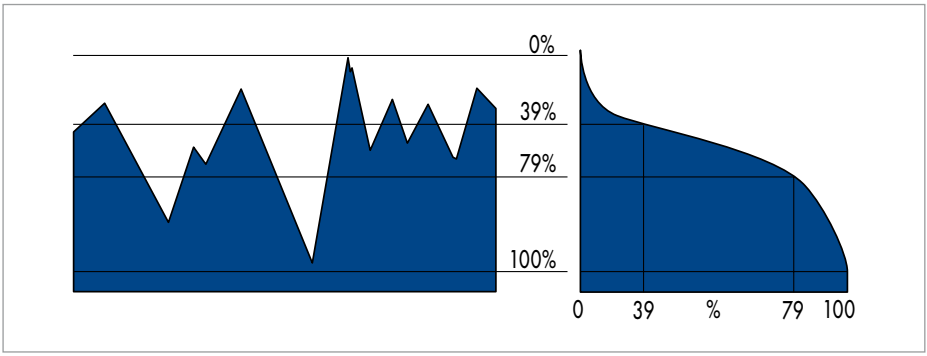

Fig. 29 Abbott graph

In the case of FST the entire surface including the full peak height relevant to the abrasivity and possible damage at first contact is considered starting from a reference line at Cref = 0% (→ Fig. 30). It remains unconsidered with a reference line Cref = 5% (→ Fig. 31).

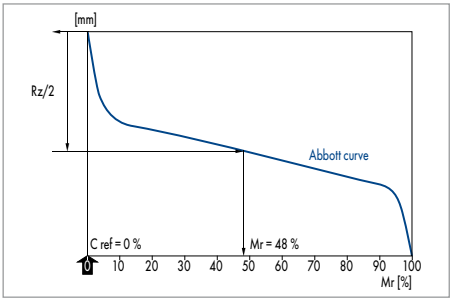

Fig. 30 FST material component definition

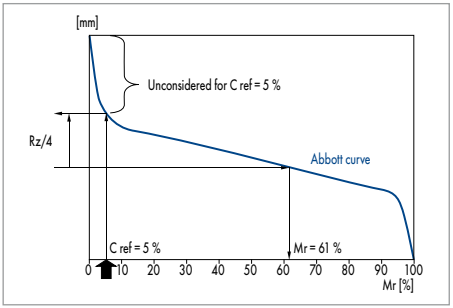

Fig. 31 Competition material component definition

Parameters such as R_a, R_{max}, Rz and the material content M_r have become established. The behaviour of the counter surface compared to the sealing components cannot yet be described with sufficient accuracy with reference to the abrasivity.

EXTENDED LABORATORY DESCRIPTION OF THE COUNTER SURFACE

The service life of the sealing component in a sealing system is determined by the contact between the counter surface and the sealing component. The contact influences by the comparatively soft sealing component (wear) and the hard counter surface (smoothing). If the sealing edge is damaged as a result of abrasive wear on the first strokes of the hydraulic cylinder, the sealing effect and the service life will be reduced accordingly. An extended laboratory examination of the counter surface is urgently required to measure abrasivity to ensure stable running characteristics over the long term.

The description of the counter surface can be refined by evaluation of additional parameters of the Abbott curve (→ Fig. 32):

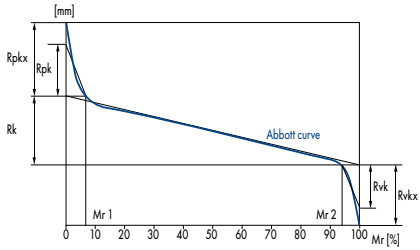

Rpkx, full peak height; abrasive component.

Rpk, reduced peak height; profile peaks.

Rk, core surface roughness; supporting core; the main function area

Rvk, reduced groove depth; profile grooves; lubricant depot.

Rvkx, full groove depth; only minor influence on the sealing system.

Rpk, Rk, Rvk, Mr1 and **Mr2** cannot be influenced any more without simultaneously influencing shape, position and dimensions.

Fig. 32 Additional parameters

FST has set a new direction with the definition of new surface parameters for detailed description of the counter surface for sealing components. The results are currently being applied to a wider base in collaboration with major manufacturers of injection moulding machines, presses and general cylinder manufacturing. In the current state of knowledge at FST the surface parameters listed in Table 5 with the stated limit values are suitable for a complete description of the counter surface for sealing components.

Compared to the currently considered surface parameters we expect significantly improved predictability of abrasivity and long-term behaviour.
Our insights do not yet include ceramic or partial ceramic counter surfaces. Because such surfaces in contact with sealing components have a special position, we would like to exclude these surfaces from the above information.

Ideal flat	Unsuitable too fine	Suitable	Unsuitable too rough
1	2	3	4
R_a	> 0,05 µm	< 0,30 µm	
R_{max}	–	< 2,50 µm	
R_{pkx}	–	< 0,50 µm	
R_{pk}	–	< 0,50 µm	
R_k	> 0,25 µm	< 0,70 µm	
R_{vk}	> 0,20 µm	< 0,65 µm	
R_{vkx}	> 0,20 µm	< 2,00 µm	

Tbl. 5 Limit positions of the additional parameters

MATERIALS

SELECTION

The function of a sealing component is influenced by the geometry and primarily by the seal material. The influence of the specific material properties on the function of the seal in this regard depends among other factors on the nature of the relative movement between the sealing component and the counter surface (stroke, rotation, static).

As well as the chemical resistance the form stability, friction behaviour and elastic behaviour are significant influence factors. Unwanted material influences are in part compensated by additional components such as back-up rings (extrusion resistance) or pre-load components (initial sealing effect). A function-oriented design of the seal always considers the sealing material in use. Not every geometry can be manufactured easily with every material.

MATERIALS

In hydraulic applications multi-component sealing components with a sliding ring of PTFE compound and an elastomer pre-load component as well as single and multi-component sealing components of elastomer (NBR, FKM) or polyurethane are primarily used. For the guide elements fabric-base laminate compounds are mostly used.

Back-up rings are manufactured of PTFE (polytetrafluoroethylene), PA (polyamide) or POM (polyoxymethylene) depending on the requirements. As well as these materials in some cases special materials such as PE (polyethylene), TPE (thermoplastic polyester-elastomer) and PEEK (polyetheretherketone) are used.

PTFE COMPOUND

Pure (virgin) PTFE has a comparatively low structure and friction strength. Even under a low load the material is deformed and begins to flow (cold flow). The addition of fillers (compounding) such as bronze, glass fibre and carbon fibre can significantly improve form stability and friction strength. Depending on the requirements other fillers such as carbon or graphite and also colour additives are also used.

PTFE is a horny, non-elastic material. The initial contact pressure of the PTFE sealing component to the counter surface required for the sealing function can only be applied by an additional contact pressure element (elastomer or spring) because of the missing elasticity. PTFE sealing components therefore always have multiple components.

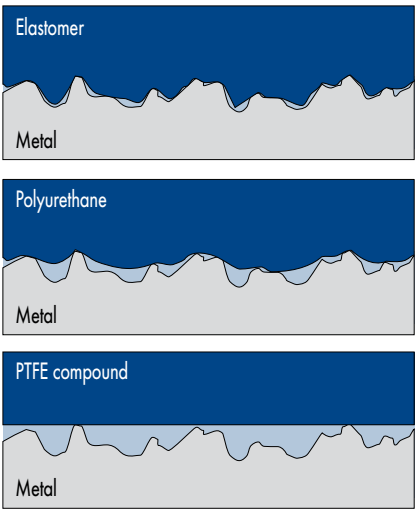

Fig. 33 Sealing edge in contact with counter surface

PTFE compounds are noted for high pressure resistance and favourable friction behaviour. A friction value (oiled) between μ = 0,02 and μ = 0,1 can be expected depending on the contact conditions.

The structure of the PTFE material causes the sealing component to slide on the higher components of the surfaces (microstructure). The sealing edge does not enter the roughness valleys (→ Fig. 33). As a result of this behaviour PTFE sealing components allow a comparatively thicker lubricating film beneath the sealing edge.

PTFE sealing components are preferably used as a primary seal in sealing systems or as a piston seal with bilateral pressure application.

Dirt adhering to the piston rod can be kept from entering the hydraulic system with suitable design of the wiping edge when using wipers of PTFE compound.

When selecting the PTFE compound amongst others the following properties are assessed with reference to the actual application:

- The influence of the hydraulic medium
- The behaviour in contact with the counter surface
- The form stability depending on the operating temperature.

PTFE bronze (PTFE B602) is the standard compound for general applications. In addition to its very smooth sliding properties the high form stability, even at high temperatures, as well as high wear resistance are particularly important.

The metal bronze and its components are not chemically neutral. In contact with water or water emulsion and in some cases also with additives in the hydraulic medium chemical reactions may be started.

The chemical reaction and also generally the results of insufficient lubrication can cause a typical damage pattern (fine strips) on the counter surface in contact with the sliding ring of a sealing component of PTFE bronze.

The restriction described is generally applicable for all PTFE bronze compounds available on the market. However, because of the compounding, which varies in detail, the results must be evaluated very differently.

If the lubrication is insufficient (poorly lubricating hydraulic medium, short stroke, stroke at high load and low stroke speed), the use of PTFE glass fibre MoS2 (PTFE GM201) has proven to be suitable. Influence by standard hydraulic media is not a factor because the glass fibres are chemically neutral.

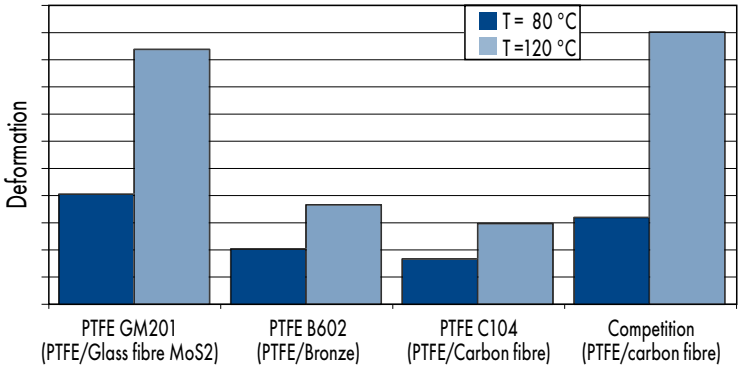

Fig. 34 Form stability of PTFE compounds in comparison

The pressure resistance of PTFE glass fibre is lower than that of PTFE bronze. In the temperature range above 100 °C there are significant differences in the form stability in comparison with PTFE bronze (→ Fig. 34).

The positive properties of PTFE bronze and PTFE glass fibre are combined in the PTFE carbon fibre compound (PTFE C104). The compound has favourable behaviour with insufficient lubrication and comparatively high form stability.

The matrix of modified PTFE is the difference in compound PTFE C104 compared to other PTFE carbon fibre compounds. The cost of the base material and the processing are higher than for PTFE bronze, PTFE glass fibre and simple PTFE carbon fibre compounds. Therefore, this compound is generally used for applications where neither PTFE bronze nor PTFE glass fibre MoS2 appear suitable.

The maximum permissible operating pressure is primarily determined by the extrusion gap and the temperature-dependent form stability of the seal material. Because the size of the extrusion gap cannot be selected as very small with reference to metal contacts, the pressure application range of the sealing component must be limited depending on the temperature.

An operating pressure of up to 40 MPa is generally permissible in the average temperature range, depending on the extrusion gap. At an operating temperature above 100 °C the operating pressure should remain limited to 26 MPa with the use of PTFE glass fibre and the simple PTFE carbon fibres.

The PTFE profile ring of a PTFE seal is machine-manufactured up to a nominal diameter of 2000 mm. It cannot be manufactured by injection moulding.

POLYURETHANE

Polyurethane has a high wear resistance and a comparatively high form stability. With the elastic behaviour of the material sealing components can be designed as single-piece components, i.e. without an extra pre-load component. Polyurethane under pressure behaves as a viscous fluid. At an operating pressure above 10 MPa sealing components of polyurethane are completely formed. The full contact to the counter surface makes ingress of the lubricating medium in the contact area difficult and as a consequence increases the friction wear. The use of a sealing system should be preferred to the individual seal with reference to the achievable service life.

Code	Colour
95 AU V142	dark-blue
94 AU 925	light-blue
93 AU V167	light-red
93 AU V168	light-red
95 AU V149	dark-blue
AU V206	dark-yellow
AU V204	light-yellow
92 AU 21100	white

Tbl. 6 Overview of polyurethane

Sealing components of polyurethane wipe away the hydraulic medium reliably with suitable design of the sealing edge. Assuming adequate media resistance, seals of polyurethane are used as primary and secondary seals (gap pressure up to 5 MPa) inside sealing systems. Their use as individual seals in combination with a double wiper is also widespread. With its high wear resistance polyurethane is also very suitable as a material for wipers. Sealing components of polyurethane can be manufactured by injection moulding or rotary processes to a nominal diameter of approximately 2000 mm. The qualities of polyurethane used (→ Tbl. 6) can be processed more or less easily depending on the nominal diameter and the manufacturing process. On the other hand some qualities are noted for excellent properties such as increased resistance to hydrolysis (hydrolysis = loss of structure as a result of contact with water) or improved properties in the low-temperature range.

ELASTOMERS

Sealing, wiping and pre-load components of NBR (acrylonitrile-butadiene rubber) or FKM (fluoro elastomer) are primarily used in the area of hydraulic applications. Depending on the general conditions HNBR (hydrogenated acrylonitrile-butadiene rubber) and EPDM (ethylene-propylene-diene rubber) are also used.

Sealing components of elastomer wipe away the hydraulic medium and also fine dirt reliably with suitable design of the sealing edge. In this respect they are superior to PTFE and polyurethane. On the other hand the high sealing effect causes the elastomer to penetrate the microstructure of the counter surface (→ Fig. 36) and thus forms a very close contact between the sealing component and the counter surface. The friction and the wear are increased particularly when pressure is applied compared to PU and PTFE (→ Fig. 35).
Sealing components of elastomer tend to adhere to the counter surface after extended downtime because of this property.

Because of the low resistance to gap extrusion (form stability) seals of elastomer without additional reinforcement such as fabric inserts (Chevron seal sets) or back-up rings can only be used at low pressures up to 10 MPa.

Elastomer seals with fabric reinforcement are robust and with pressure applied have sufficient form stability. However, such sealing components are often not sufficient to meet the increased demands related to stroke speed and service life, primarily because of the unsuitable Friction behaviour.
Elastomers are mainly used as wipers and in the form of O-rings as static seals or pre-load components. Elastomers are only used as secondary seals in sealing systems if polyurethane cannot be used because of the media resistance or the operating temperature.

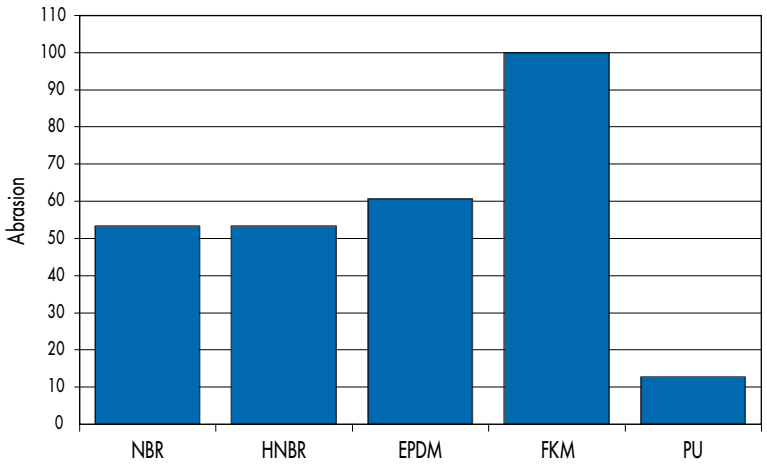

Fig. 35 Wear behaviour in comparison

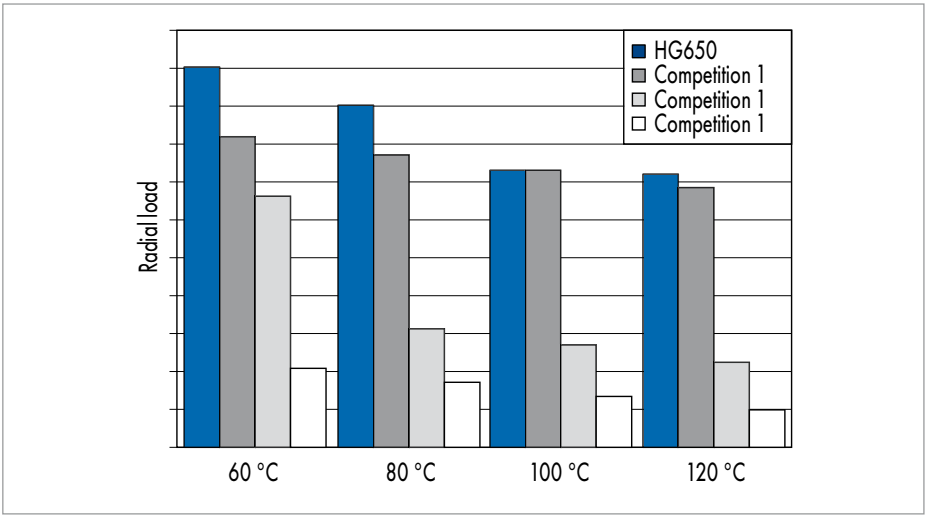

Fig. 36 Loading depending on the operating temperature

FABRIC-BASE LAMINATE

Fabric-base laminates consist of a fine fabric bonded with resin. Relevant properties such as the friction strength, the permissible surface load (acceptance of transverse loading) and the temperature dependency of the material behaviour are set depending on the properties of the components. Polyester and other plastics and also natural materials such as cotton are used for the fine fabric. In addition to polyester, vinyl ester and phenol resin a whole range of plastics with various properties are available for the resin matrix. While the friction resistance of the established compounds is generally at a comparatively high level, there are significant differences in the permissible surface load and the dependence on the operating temperature (→ Fig. 36).

Thermoplastic base materials, such as polyester, have a significant natural temperature-dependent material behaviour. At higher temperatures guide elements of these materials can only accept low transverse loads. For other compounds the influence of the operating temperature on the permissible surface pressure is only minor.

In the diameter range up to 300 mm HG517 and HG650 are currently used by the metre cut to length and above 300 mm the HG650 quality is used by the metre cut to length. Material quality HG650 represents the standard of the future over the complete dimension range. The advantage of HG650 in addition to the outstanding pressure resistance compared to competitive products is the improved handling (fitting) for small diameters (<60 mm).

Code	Colour
HG517	dark grey
HG650	Red

Tbl. 7 Overview of fabric-base laminates

INSTALLATION OF HYDRAULIC SEALS

Before installing the sealing components the compete system must be cleaned to remove machining residues, chips, dirt and other particles. Seals must not be pulled over sharp edges, threads, feather key grooves or similar when mounting. These parts must be covered during fitting (→ Fig. 37). Sharp edges must be de-burred or chamfered or radiused. Never use sharp-edged tools. Seal, piston rod and cylinder bore must be oiled or greased before fitting. Heating the seals before installation in +80 °C to +100 °C hot oil will make the seal material more elastic and it will be easier to install the seal.

Insertion chamfers on rods and pipes

To prevent damage to sealing components when mounting, cylinder bores and piston rods must be chamfered. For the surface quality of the chamfer R_t ≤4 µm is applicable.

The edge at the transition from the chamfer to the sliding surface must be rounded and polished. Product-specific information can be found in the shape descriptions.

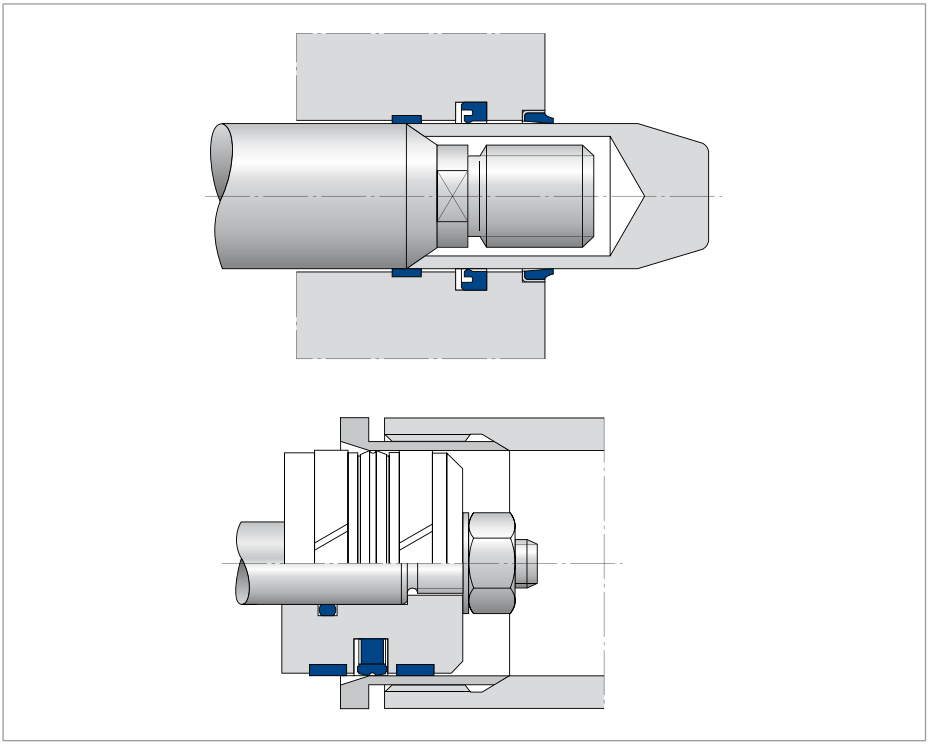

Fig. 37 Covering threads when mounting seals

FITTING OF ROD SEALS

When mounting rod seals two types of installation must be distinguished(→Fig. 38):

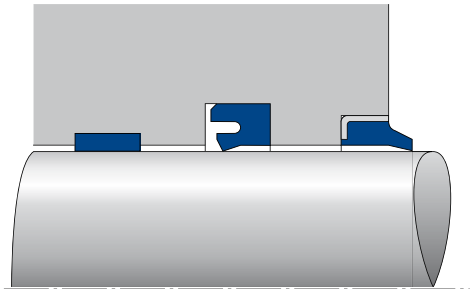

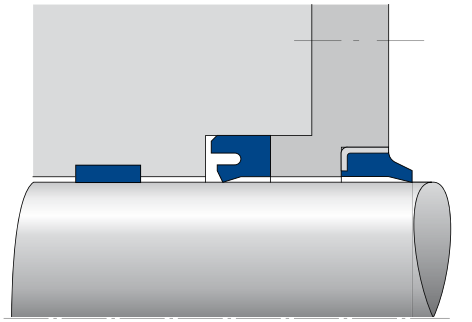

Fig. 38 Installation types of rod seals

- Snap-in fitting in an undivided installation space (installation recommendation I).
  Seals that are suitable for this type of installation are marked with h and w in the tables of dimensions.
- Fitting in a divided installation space (installation recommendation II).
  Seals that required a divided installation space are not marked in the tables of dimensions.

Assembly tools for rod seals

Snap-in fitting in undivided housings (recommended installation) can be made must easier with suitable assembly tools. The fitting tool I (order no. 00375753) can be used to snap in U-rings from 35 mm diameter (profile size 5 mm) up to a nominal diameter of 80 (profile size 10 mm) in undivided grooves. The ring is pressed into a kidney shape and pushed into the rod guide. The fitting tool is withdrawn after the seal has snapped into the groove.

Another option for snap-in fitting of rod seals is to use a suitable stopper and a rod (→ Fig. 41).

Here the seal is initially placed manually in the groove and then pushed with a rod until it snaps into the groove. Stopper and rod should be manufactured from a suitable plastic.

Fitting of groove and compact seals with back-up ring

The Merkel SM U-Ring (primary seal) with locked-in back-up ring can be snapped into a plunge-cut groove. The sealing ring is first inserted into the groove. Then the back-up ring is installed.
Compact seals with a locked-in back-up ring can be snapped into a plunge-cut groove, depending on the diameter and profile.

Fitting of multi-part compact seals for the rod: Merkel Omegat OMS-MR

For rod diameters ≤15 mm an axially accessible housing is required. Up to rod diameter 28 mm an axially accessible housing is recommended. If this is not possible for design reasons, the seal must be selected in accordance with the smaller installation size L.
For diameter range 38 to 50 mm we also recommend using the seal in accordance with the smaller fitting size L because of the easier fitting (→ Fig. 41). The max. permissible gap widths of the type must be observed.

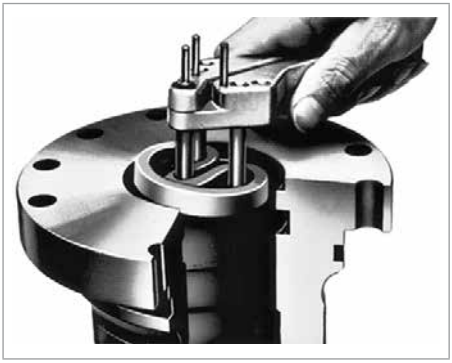

Fig. 39 Fitting tool I for rod seals

Fig. 40 Fitting tool II for rod seals

Fitting in divided housings

From a specific nominal diameter, depending on the profile size, rod seals must be installed in divided housings. The limit sizes are listed in d (→ Tbl. 8).

Rod seals in divided housings (fitting recommendation II) can be installed without special tools. For series installation we recommend using mounting sleeves and pilot shafts (→ Fig. 42).

	U-rings and single-piece compact seals						
Profile size $P = \frac{D_N - d_N}{2}$	4	5	6	7,5	10	12,5	15
Limit nominal diameters for snap-in fitting	25	30	40	50	80	100	105
Seals that are suitable for snap-in fitting are identified with h (hand) in the descriptions in the dimension lists.							

Tbl. 8 Limit dimensions for snap-in fitting (required values)

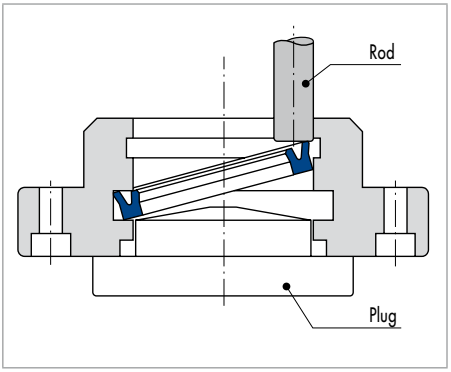

Fig. 41 Installation aid for rod seals

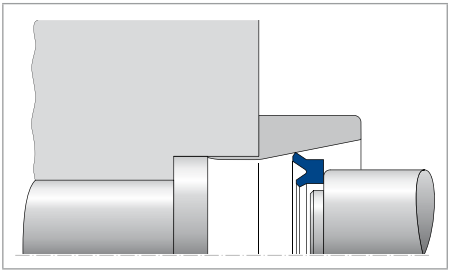

Fig. 42 Fitting of rod seals in divided housings

FITTING OF PISTON SEALS

Similar to fitting of rod seals there are also two types of installation of piston seals:

- Snap-in fitting in undivided housings.
  Seals that are suitable for this type of installation are identified with h or w in the dimension tables.
- Fitting in divided housings.
  When assembled the metal parts must adhere to preclude extrusion wear on the static side.

Multi-part compact seals for pistons

Simko Piston Seals can generally be snapped in without tools. The following illustrations show the snap-in fitting without tools for the Merkel Compact Seal Simko 300 Compact Seal. First the elastic rubber contact pressure element is snapped in. Then the PUR sealing ring is placed on one side in the groove and pushed over the previously oiled piston body until it snaps completely into the groove.

Fig. 43 Snapping in the polyurethane running ring

Fig. 44 Snapping in the polyurethane running ring

Assembly tools for piston seals
The snap-in fitting is made much easier with suitable assembly tools.

Simko Piston Seals as well as U-Rings that in some cases are used as single-acting piston seals can be easily installed with the aid of simple installation tool
See the following illustrations:

Fig. 45 Fully mounted seal

Fig. 47 Inserting mounting pin

Fig. 46 Inserting sealing ring

Fig. 48 Turning mounting lever

Fig. 49 Snapping in the guide back-up ring

FITTING OF COMPACT SEALS OF THE OMEGAT SERIES FOR PISTONS AND RODS

The Merkel Omegat Compact Piston Seals (OMK-MR, OMK-S, OMK-E, OMK-ES) and the Merkel Omegat Compact Rod Seals (OMS-MR, OMS-S) are suitable for undivided housings in virtually all dimensions. Fitting requires special care.

To prevent damage to the sealing edge, which may result in leakage before commissioning, it is important to observe our installation instructions.

Fitting for installation

Omegat Seals consist of a high-quality pressure and wear-resistant profile ring and an O-ring as the pre-load component. Careful fitting is essential for correct function.

Before starting installation, make sure that:

- The required insertion chamfers on the piston rod and cylinder bore have been de-burred and rounded,
- Thread peaks and sharp edges are covered,
- Dust, dirt, chips and other external objects must be thoroughly removed,
- The Omegat sealing components and the components are oiled or greased (use only greases without solid additives. In this regard make sure that they are compatible with the medium.),
- The assembly tools must be of soft material and have no sharp edges.

Heating them in oil up to about 80 °C makes it much easier to stretch and deform the Omegat Profile Ring.

Omegat Rod Seal	
Fitting of Omegat Rod Seals in undivided housings is very easy (d ≤Ø15 axially accessible housing required):	
Insert O-ring into the groove without twisting it.	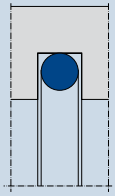
Press Omegat Profile Ring into a kidney shape (attention: do not kink!).	

Omegat Rod Seal	
A fitting tool is preferred for series fitting.	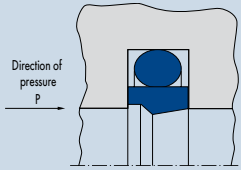
Place compressed Omegat Profile Ring on the O-ring so the sealing edge is on the pressure side.	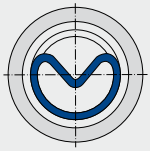
Insert Omegat Profile Ring in original shape in the groove.	
Then calibrate with a mandrel. The mandrel can be manufactured from PA, POM or similar material. Chamfers of 15° and minimum 30 mm long.	

Tbl. 9 Deformation of the profile ring

Ø d	L	Ø d mandrel
<50	15	Ø d – 0,10
≥ 50 ... <120	20	Ø d – 0,18
≥120 ... <200	30	Ø d – 0,25
≥200 ... <650	40	Ø d – 0,35
≥650 ... <900	50	Ø d – 0,50

Tbl. 10 Recommended diameter of mounting equipment

Recommendation:
Please use an assembly tool when d Ø>15 mm and for larger series. This deforms the profile ring less. The major design principles are shown in the drawing.

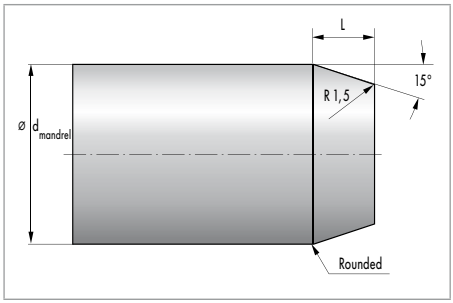

Fig. 50 Calibrating mandrel

Preferred materials: pressure mandrel – plastic
tapered sleeve – plastic

We can supply complete assembly tools on enquiry.

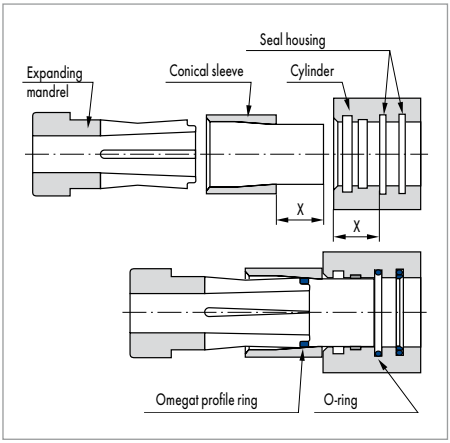

Fig. 51 Finished assembly tools (on enquiry)

Omegat Piston Seal	
Omegat Piston Seals must always be fitted in single-piece pistons with a fitting tool.	
Insert O-Ring into the groove without twisting it.	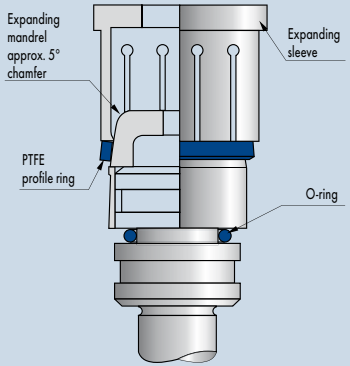
Stretch Omegat Profile Ring with spreader sleeve over a tapered mounting sleeve and spring into the groove, for larger dimensions use mounting belt (order no. 24346745) (no sharp-edged tools).	
Calibrate Omegat Profile Ring on the piston diameter with a slip ring. When using profile rings with an L-dimension ≥6,3 mm we recommend using a plastic tension belt.	

Tbl. 11 Mounting equipment for piston seal

FITTING INSTRUCTIONS FOR MERKEL COMPACT SEAL L 43

Fitting of the Merkel Compact Seal L 43 is uncomplicated and generally corresponds to the conventional compact piston seal. The assembly should be carried out in the sequence below.

FITTING OF MERKEL COMPACT SEAL T 19

We recommend using installation tools for all dimensions of the size series T 19; hand installation is possible for servicing. The sequence when mounting the individual parts is as follows:

- First angled bush
- Sealing component
- Second angled bush

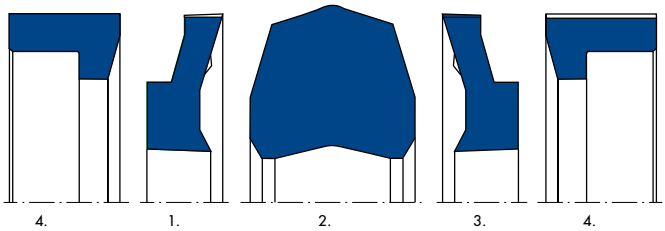

1. Back-up ring
2. Sealing component
3. Back-up ring
4. Angled bush

Fig. 52 Fitting of Merkel Compact Seal L 43

INSTALLATION INSTRUCTIONS FOR MERKEL DOUBLE WIPER PT 2

Double wipers of the PT 2 series can be installed in housings that are not axially accessible without tools from Ø150 mm. For installation first insert the large O-ring into the groove, insert the small O-ring into the groove of the PTFE profile ring, then the profile ring is placed in a kidney shape and snapped in. Make sure that the profile ring is not kinked and that the sealing edge is correctly aligned to the pressure direction. For smaller dimensions please use an installation tool. Dimensions <Ø100 mm cannot be installed in a plunge-cut groove.

INSTALLATION INSTRUCTIONS FOR MERKEL DOUBLE WIPER PT 1

Double wipers of the PT 1 series with inside diameter ≥30 mm can be installed in non-axially accessible housings without fitting tools. For smaller dimensions a fitting tool is recommended.

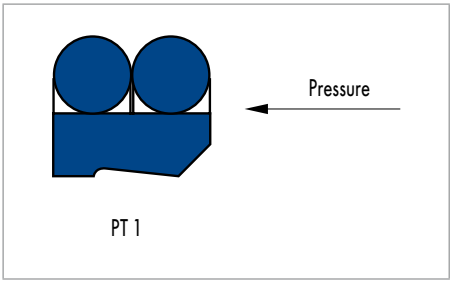

Fig. 53 Functional direction of wiper

For installation the O-rings are inserted into the groove, then the profile ring is placed in a kidney shape and snapped in. Make sure that the profile ring is not kinked and the sealing edge is correctly aligned to the pressure direction.

FITTING OF CHEVRON SEAL SETS

Instructions for Chevron Seal Set housings

Adjustable housings have the advantage of an optimal adjustment option. After a lengthy period of running and incipient wear on the seal tightening the gland can extend the service life and significantly delay a system standstill. For adjustable housings an extension of 2,5% and an adjustability of 7,5% of dimension L is recommended. Non-adjustable housings have the advantage of more cost-effective manufacture, because washers are not required. Seal Set Type B is particularly recommended for these housings. The rubber-sprung back-up rings handle the function of initial compression and continuous re-adjustment during operation. Maintenance of the seal contact area is not required.

Fitting

Before installation all individual parts of the seal set must be evenly greased. Mineral-oil-based greases can be used. The rod must be in the cylinder's installation space during fitting. The individual parts of the set must be installed separately in the chamber. In this regard make sure that the seals are not reversed. Open chevron seal sets are used for repairs, e.g. in large systems, if endless seals cannot be installed.

Please note

Open chevron seals have an oversize in the circumference length to allow sufficient compression and a good sealing effect at the joint sections. An endless delivered seal set should therefore not be cut. Open chevron seals are always supplied with installed profile cords.

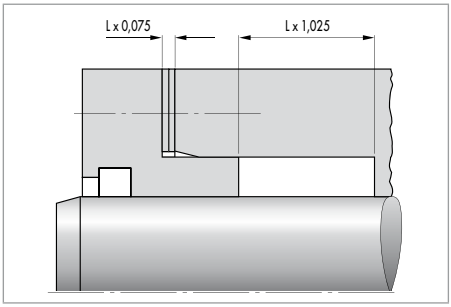

Fig. 54 DMS installation space example

FITTING OF MERKEL FORSEAL MADE OF PTFE

We recommend installation of Merkel Forseal Seals in divided grooves.
In exceptional cases there is also the option of snap-in fitting in semi-open grooves. We request you consult us in these t applications.
The sealing ring must not be kinked during fitting.

Installation instructions for Merkel Forseal FOI made of PTFE

Groove cross-section	O-Ring Ø	X_{min}	can be installed from FOI-	L
1,45 x 2,4	1,78	0,2	12	4,0
2,25 x 3,6	2,62	0,3	20	4,5
3,10 x 4,8	3,53	0,5	30	5,0
4,70 x 7,1	5,33	0,6	40	7,0
6,10 x 9,5	7,00	0,7	55	9,0

Tbl. 12 Rod housing

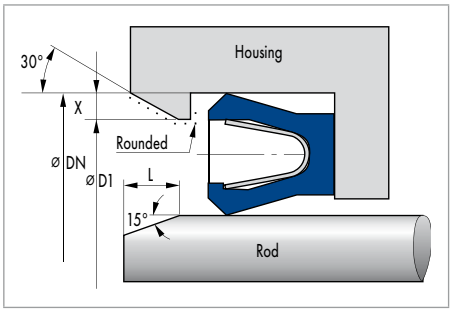

Fig. 55 Installation in half-open grooves/snap-in fitting Merkel Forseal FOI

Installation instructions for Merkel Forseal FOA made of PTFE

Groove cross-section	O-Ring Ø	X_{min}	can be installed from FOA-	L
1,45 x 2,4	1,78	0,4	15	4,0
2,25 x 3,6	2,62	0,6	20	4,5
3,10 x 4,8	3,53	0,7	25	5,0
4,70 x 7,1	5,33	0,8	30	7,0
6,10 x 9,5	7,00	0,9	45	9,0

Tbl. 13 Piston housing

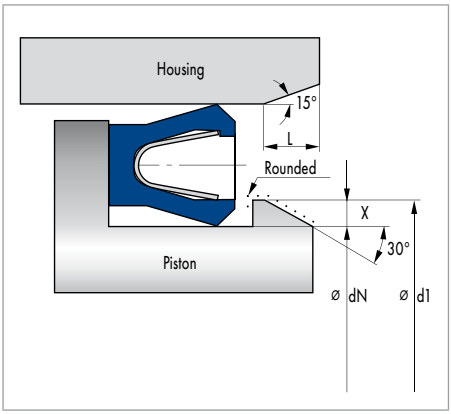

Fig. 56 Installation in half-open grooves/snap-in fitting Merkel Forseal FOA

PRODUCTS

A ● marks types to be preferably used with new designs

ROD SEALS

PISTON SEALS

WIPERS

GUIDES

PROFILES FOR OSCILLATING APPLICATIONS

SEALS FOR SWIVELLING MOVEMENT

RADIAL AND AXIAL SEALS

SYMMETRIC SEALS

STATIC SEALS

FITTING TOOLS AS MOUNTING AUXILIARIES

PRE-SELECTION HYDRAULICS – ROD SEALS

Temperature figures refer to mineral oils. Due to the large choice of media with different and varying additives, which is not always easily comprehensible, the above operating limits are only recommended values. We recommend testing resistance in the specific case.
Individual instances of the operating limits stated may be exceeded taking into account the related operating conditions. With a long duty cycle, stop-start operation or other difficult operating conditions it is recommended that these values are not simultaneously exploited to the full.

Seal		Standard		
Type	**Material**	**DIN/ISO**	**Examples of use**	
Omegat OMS-MR 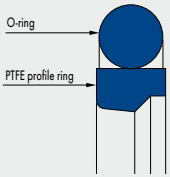	PTFE bronze NBR PTFE bronze FKM PTFE glass NBR	based on 7425/2	For high requirements in sealing systems, low friction, free of stick-slip, high temperature resistance/ high heat dissipation ability.	
Omegat OMS-S 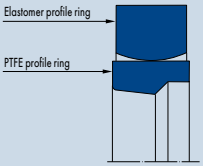	PTFE glass NBR		Very high resistance to pressure, specifically for heavy duty hydraulic applications, low friction, free of stick-slip, high contact pressure and design which prevents twisting through elastomer profile ring.	
Omegat OMS-MR PR 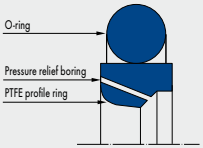	PTFE bronze NBR PTFE bronze FKM PTFE glass NBR	based on 7425/2	Patented pressure relief for high reliability, for high requirements in sealing systems, low friction, free of stick-slip, high temperature resistance/heat dissipation ability.	

● = very good; ◑ = good; ○ = possibile or satisfactory; ⊗ = not suitable

	Function					Operating Limits		
	single-acting	double-acting	Individual seal	Primary seal	Secondary seal	Pressure (MPa)	Speed (m/s)	Temperature (°C)
	●	⊗	●	●		40	5	−30 ... +100
	●	⊗	●	●		40	5	−30 ... +100
	●	⊗		●	⊗	40	5	−30 ... +100

Seal		Standard		
Type	**Material**	**DIN/ISO**	**Examples of use**	
Omegat OMS-S PR 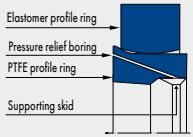	PTFE bronze NBR PTFE glass NBR		Patented pressure relief for high reliability, specifically for heavy duty hydraulic applications, low friction, free of stick-slip, high temperature resistance/heat dissipation ability.	
T 20 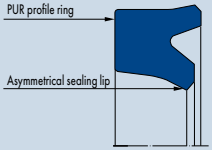	95 AU V142	5597/1	Optimal price/performance ratio.	
T 24 	95 AU V142		Very good static and dynamic tightness, specifically for telescopic cylinders and for radially narrow housings.	
TM 20 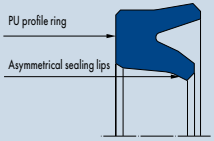	95 AU V142		Very good static and dynamic tightness, low breakaway force, specifically for special sizes.	
TMP 20 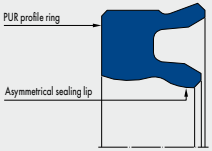	95 AU V167		High tightness, specifically for pneumatic applications.	

● = very good; ◑ = good; ○ = possibile or satisfactory; ⊗ = not suitable

	Function					Operating Limits		
	single-acting	double-acting	Individual seal	Primary seal	Secondary seal	Pressure (MPa)	Speed (m/s)	Temperature (°C)
	●	⊗		●	⊗	40	5	−30 ... +100
	●	⊗	●	⊗	●	40	0,5 ... 0,8*	−30 ... +110
	●	⊗	●	⊗	●	40	0,5	−30 ... +110
	●	⊗	●	⊗	●	40	0,5	−30 ... +110
	●	⊗	●	⊗	●	2	1,5	−10 ... +80

Seal		Standard		
Type	**Material**	**DIN/ISO**	**Examples of use**	
Syprim SM 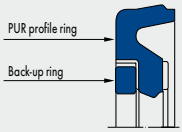	95 AU V142/POM	based on 5597/1	Standard buffer seal in sealing systems.	
LF 300 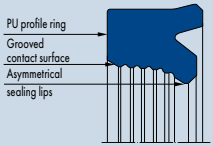	94 AU 925	5597/1	Low friction, optimised with regards to stick-slip behaviour, optimised with regards to hydrodynamic deformation value.	
NI 300 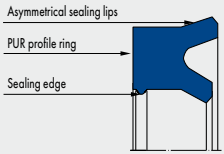	94 AU 925	5597/1	Additional protection against dirt intrusion.	
KI 310 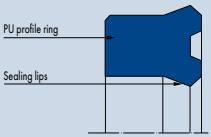	94 AU 925	5597/1	For narrow housings, high sealing effect at low pressures.	
KI 320 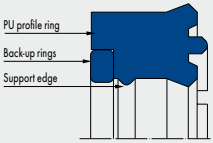	94 AU 925/POM	5597/1	For high pressures and large gap widths.	

● = very good; ◑ = good; ○ = possibile or satisfactory; ⊗ = not suitable

	Function					Operating Limits		
	single-acting	double-acting	Individual seal	Primary seal	Secondary seal	Pressure (MPa)	Speed (m/s)	Temperature (°C)
	●	⊗		●	⊗	40	0,5	−30 ... +110
	●	⊗	●	⊗	●	32	0,6 ... 0,8*	−30 ... +110
	●	⊗	●	⊗	●	40	0,5	−30 ... +110
	●	⊗	●	⊗	●	40	0,5	−30 ... +110
	●	⊗	●	⊗	●	50	0,5	−30 ... +110

MERKEL U-RING LF 300

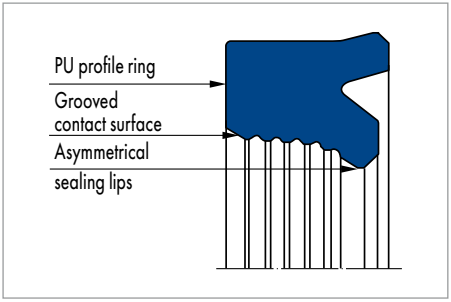

Merkel U-Ring LF 300

PRODUCT ADVANTAGES

Single-acting rod seal for standardised housings, amongst others, according to ISO 5597

- Very good static and dynamic tightness
- Low friction, smooth movement even at low running speeds, dynamic deformation value
- Use as an individual seal or secondary seal in sealing systems possible.

APPLICATION

Earth moving equipment, agricultural machinery, injection moulding machines, industrial vehicles, cranes, loading platforms.

PRODUCT DESCRIPTION

Merkel U-ring with asymmetrical profile, inner lip set back, grooved contact surface on the inside diameter as well as press fit at the outside diameter.

MATERIAL

Material	Code	Hardness
Polyurethane	94 AU 925	94 Shore A
Polyurethane	92 AU 21100	92 Shore A

OPERATING CONDITIONS

Material	94 AU 925	92 AU 21100
	Temperature range in °C	
Hydraulic oils HL, HLP	−30 ... +110	−40 ... +100
HFA fluids	+5 ... +50	+5 ... +50
HFB fluids	+5 ... +50	+5 ... +50
HFC fluids	−30 ... +40	−40 ... +40
HFD fluids	–	–
Water	+5 ... +40	+5 ... +40

Material	94 AU 925	92 AU 21100
	Temperature range in °C	
HETG (rapeseed oil)	−30 ... +60	−40 ... +60
HEES (synthetic ester)	−30 ... +80	−40 ... +80
HEPG (glycol)	−30 ... +40	−40 ... +40
Mineral greases	−30 ... +110	−40 ... +100
Pressure p in MPa	32	32
Running speed v in m/s	0,6	0,6

If the U-ring LF 300 is used as a secondary seal, running speeds up to 0,8 m/s can be allowed.

Surface quality

Surface roughness	R_a	R_{max}
Sliding surface	0,05 ... 0,3 µm	≤2,5 µm
Groove base	≤1,6 µm	≤6,3 µm
Groove flanks	≤3,0 µm	≤15,0 µm

Percentage contact area Mr >50% to max. 90% at cutting depth c = Rz/2 and reference line C ref = 0%.

DESIGN NOTES

Please observe our general design notes.

Gap dimension

The decisive factor for the function of the seal is the largest gap dimension occurring during operation on the non-pressurised side of the seal.

Profile	Max. permissible gap dimension		
	16 MPa	26 MPa	32 MPa
4,0 ... 5,0	0,50	0,40	0,35
>5,0 ... 7,5	0,55	0,45	0,40

Tolerance recommendation and dimension D2

The admissible gap width, tolerances, guide play and deflection of the guide under load are to be taken into account when designing D2.

Nominal Ø d	d	D
≤180	f8	H11

FITTING & INSTALLATION

Careful fitting is a prerequisite for the correct function of the seal.

MERKEL U-RING NI 150

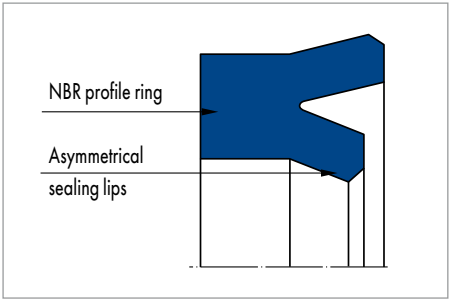

Merkel U-Ring NI 150

PRODUCT DESCRIPTION

Merkel U-ring with asymmetrical profile of the sealing lips.

PRODUCT ADVANTAGES

Single-acting rod seal, for applications such as standardised housings according to ISO 5597; preferably for spare parts requirements.

APPLICATION

Earth moving equipment, mobile hydraulics, agricultural machinery.

MATERIAL

Material	Code	Hardness
Nitrile rubber	80 NBR 878	80 Shore A

OPERATING CONDITIONS

Material	80 NBR 878
	Temperature range in °C
Hydraulic oils HL, HLP	−30 ... +100
HFA fluids	+5 ... +60
HFB fluids	+5 ... +60
HFC fluids	−30 ... +60
HFD fluids	–
Water	+5 ... +90
HETG (rapeseed oil)	−30 ... +80
HEES (synthetic ester)	–
HEPG (glycol)	−30 ... +60
Mineral greases	−30 ... +100
Pressure p in MPa	10
Running speed v in m/s	0,5

* max. pressure depends on the profile.

Surface quality

Surface roughness	R_a	R_{max}
Sliding surface	0,05 ... 0,3 µm	≤2,5 µm
Groove base	≤1,6 µm	≤6,3 µm
Groove flanks	≤3,0 µm	≤15,0 µm

Percentage contact area M_r >50% to max. 90% at cutting depth c = Rz/2 and reference line C ref = 0%.

DESIGN NOTES

Please observe our general design notes.

Gap dimension

The decisive factor for the function of the seal is the largest gap dimension occurring during operation on the non-pressurised side of the seal.

Profile	Max. permissible gap dimension			
	2,5 MPa	5 MPa	7,5 MPa	10 MPa
≤5	0,45	0,30	0,25	0,20
>5	0,50	0,35	0,30	0,25

Tolerance recommendation and dimension d2

The admissible gap width, tolerances, guide play and deflection of the guide under load are to be taken into account when designing D2.

Nominal Ø d	d	D
≤180	f8	H11

FITTING & INSTALLATION

Careful fitting is a prerequisite for the correct function of the seal.

MERKEL U-RING NI 250

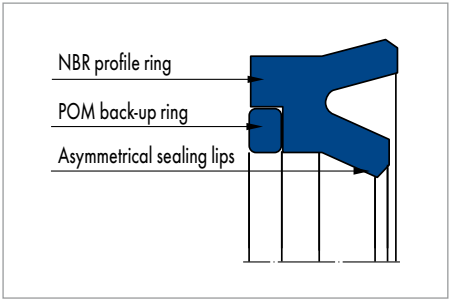

Merkel U-Ring NI 250

PRODUCT DESCRIPTION

Merkel U-ring with asymmetrical profile of the sealing lips and back-up ring as a gap sealing component.

PRODUCT ADVANTAGES

Single-acting rod seal for medium loads, predominantly for spare parts requirements.

APPLICATION

Special cylinders, earth moving equipment, excavators, forestry equipment.

MATERIAL

Sealing component

Material	Code	Hardness
Nitrile rubber NBR	80 NBR 878	80 Shore A

Back-up ring

Material	Code
Polyacetal	POM 992020

OPERATING CONDITIONS

Material	80 NBR 878/POM
	Temperature range in °C
Hydraulic oils HL, HLP	−30 ... +100
HFA fluids	+5 ... +60
HFB fluids	+5 ... +60
HFC fluids	−30 ... +60
HFD fluids	–
Water	+5 ... +90
HETG (rapeseed oil)	−30 ... +80
HEES (synthetic ester)	–
HEPG (glycol)	−30 ... +60
Mineral greases	−30 ... +100
Pressure p in MPa	25
Running speed v in m/s	0,5

Surface quality

Surface roughness	R_a	R_{max}
Sliding surface	0,05 ... 0,3 µm	≤2,5 µm
Groove base	≤1,6 µm	≤6,3 µm
Groove flanks	≤3,0 µm	≤15,0 µm

Percentage contact area M_r >50% to max. 90% at cutting depth c = Rz/2 and reference line C ref = 0%.

DESIGN NOTES

Please observe our general design notes.

Gap dimension

The decisive factor for the function of the seal is the largest gap dimension occurring during operation on the non-pressurised side of the seal.

Profile	Max. permissible gap dimension		
	7,5 MPa	10 MPa	25 MPa
≤80	0,95	0,80	0,60
>80	1,00	0,85	0,65

Tolerance recommendation and dimension d2

The admissible gap width, tolerances, guide play and deflection of the guide under load are to be taken into account when designing D2.

Nominal Ø d	d	D
≤120	f8	H11

FITTING & INSTALLATION

Careful fitting is a prerequisite for the correct function of the seal.

MERKEL U-RING NI 300

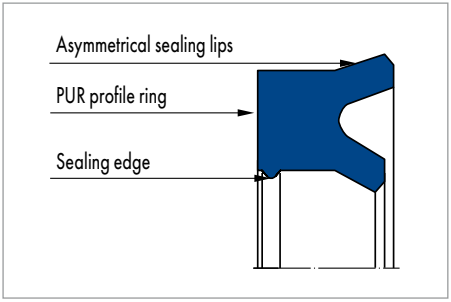

Merkel U-Ring NI 300

PRODUCT DESCRIPTION

Merkel U-ring with asymmetrical profile, inner lip set back, additional support edge and sealing edge as well as press fit at the outside diameter.

PRODUCT ADVANTAGES

Single-acting rod seal for standardised housings, amongst others, according to ISO 5597

- Very good static and dynamic tightness
- Additional sealing edge, prevents ingress of dirt to a large degree
- Recommended for use in combination with single-acting wipers.

APPLICATION

Earth moving equipment, support cylinders, cranes, presses.

MATERIAL

Material	Code	Härte
Polyurethan	94 AU 925	94 Shore A

OPERATING CONDITIONS

Material	94 AU 925
	Temperature range in °C
Hydraulic oils HL, HLP	−30 ... +110
HFA fluids	+5 ... +50
HFB fluids	+5 ... +50
HFC fluids	−30 ... +40
HFD fluids	–
Water	+5 ... +40
HETG (rapeseed oil)	−30 ... +60
HEES (synthetic ester)	−30 ... +60
HEPG (glycol)	−30 ... +40
Mineral greases	−30 ... +110
Pressure p in MPa	40
Running speed v in m/s	0,5

Surface quality

Surface roughness	R_a	R_{max}
Sliding surface	0,05 ... 0,3 µm	≤2,5 µm
Groove base	≤1,6 µm	≤6,3 µm
Groove flanks	≤3,0 µm	≤15,0 µm

Percentage contact area M_r >50% to max. 90% at cutting depth c = Rz/2 and reference line C ref = 0%.

DESIGN NOTES

Please observe our general design notes.

Gap dimension

The decisive factor for the function of the seal is the largest gap dimension occurring during operation on the non-pressurised side of the seal.

Profile	Max. permissible gap dimension			
	16 MPa	26 MPa	32 MPa	40 MPa
4,0 ... 5,0	0,50	0,40	0,35	0,30
>5,0 ... 7,5	0,55	0,45	0,40	0,35
>7,5 ... 12,5	0,66	0,50	0,45	0,40
>12,5	0,60	0,55	0,50	0,45

Tolerance recommendation and dimension d2

The admissible gap width, tolerances, guide play and deflection of the guide under load are to be taken into account when designing D2.

Nominal Ø d	d	D
4 ... 260	f8	H11

FITTING & INSTALLATION

Careful fitting is a prerequisite for the correct function of the seal.

MERKEL U-RING NI 400

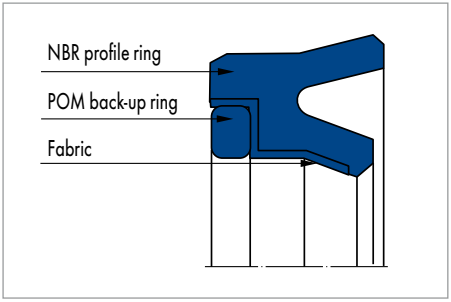

Merkel U-Ring NI 400

PRODUCT DESCRIPTION

Merkel U-ring with asymmetrical profile of the sealing lips, fabric reinforcement on the dynamic sealing side and back-up ring as a gap sealing component.

PRODUCT ADVANTAGES

Single-acting rod seal for medium loads, predominantly for spare parts requirements.

APPLICATION

Heavy duty earth moving equipment, industrial vehicles, presses, control and regulation equipment.

MATERIAL

Sealing component

Material	Code	Hardness
Nitrile rubber NBR	80 NBR 878	80 Shore A

Back-up ring

Material	Code
Polyacetal	POM 992020

OPERATING CONDITIONS

Material	80 NBR 878/POM
	Temperature range in °C
Hydraulic oils HL, HLP	−30 ... +100
HFA fluids	+5 ... +60
HFB fluids	+5 ... +60
HFC fluids	−30 ... +60
HFD fluids	–
Water	+5 ... +90
HETG (rapeseed oil)	−30 ... +80
HEES (synthetic ester)	–
HEPG (glycol)	−30 ... +60
Mineral greases	−30 ... +100
Pressure p in MPa	40
Running speed v in m/s	0,5

Surface quality

Surface roughness	R_a	R_{max}
Sliding surface	0,05 ... 0,3 µm	≤2,5 µm
Groove base	≤1,6 µm	≤6,3 µm
Groove flanks	≤3,0 µm	≤15,0 µm

Percentage contact area M_r >50% to max. 90% at cutting depth c = Rz/2 and reference line C ref = 0%.

DESIGN NOTES

Please observe our general design notes.

Gap dimension

The decisive factor for the function of the seal is the largest gap dimension occurring during operation on the non-pressurised side of the seal.

Profile	Max. permissible gap dimension			
	16 MPa	26 MPa	32 MPa	40 MPa
≤80	0,60	0,50	0,40	0,35
>80	0,65	0,55	0,45	0,40

Tolerance recommendation and dimension D2

The admissible gap width, tolerances, guide play and deflection of the guide under load are to be taken into account when designing D2.

Nominal Ø d	d	D
≤360	f8	H11

FITTING & INSTALLATION

Careful fitting is a prerequisite for the correct function of the seal.

MERKEL U-RING T 20

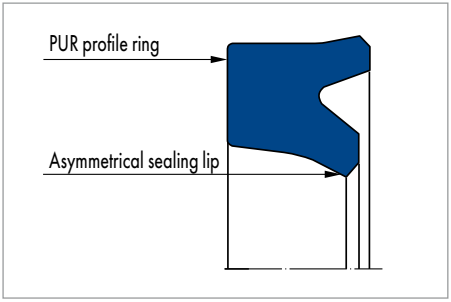

Merkel U-Ring T 20

PRODUCT ADVANTAGES

Single-acting rod seal for standardised housings, amongst others, according to ISO 5597; very suitable as a secondary seal within a sealing system

- Good media resistance
- Wide operating temperature range
- Very good static and dynamic tightness
- Low breakaway force (in comparison to compact seals or U-rings with secondary sealing edge in corresponding material)
- Dynamic deformation value.

APPLICATION

Earth moving equipment, agricultural machinery, injection moulding machines, support cylinders, cranes, loading platforms, fork-lift trucks, standard cylinders.

PRODUCT DESCRIPTION

Merkel U-ring with asymmetrical profile, inner lip set back and press fit at the outside diameter.

MATERIAL

Ø range <500 mm

Material	Code	Hardness	Colour
Polyurethane	95 AU V142	95 Shore A	Blue

Ø range >500 mm

Material	Code	Hardness	Colour
Polyurethane	93 AU V167	93 Shore A	Red

OPERATING CONDITIONS

Material	95 AU V142/93 AU V167
	Temperature range in °C
Hydraulic oils HL, HLP	−30 ... +110
HFA fluids	+5 ... +50
HFB fluids	+5 ... +50
HFC fluids	−30 ... +40

Material	95 AU V142/93 AU V167
	Temperature range in °C
HFD fluids	–
Water	+5 ... +50
HETG (rapeseed oil)	−30 ... +60
HEES (synthetic ester)	−30 ... +80
HEPG (glycol)	−30 ... +50
Mineral greases	−30 ... +110
Pressure p in MPa	40
Running speed v in m/s	0,5*

* If a Merkel U-Ring T 20 is used as a secondary seal, higher running speeds may be permitted.

Surface quality

Surface roughness	R_a	R_{max}
Sliding surface	0,05 ... 0,3 µm	≤2,5 µm
Groove base	≤1,6 µm	≤6,3 µm
Groove flanks	≤3,0 µm	≤15,0 µm

Percentage contact area M_r >50% to max. 90% at cutting depth c = Rz/2 and reference line C ref = 0%.

DESIGN NOTES

Please observe our general design notes.

Gap dimension

The decisive factor for the function of the seal is the largest gap dimension occurring during operation on the non-pressurised side of the seal.

Profile	Max. permissible gap dimension			
	16 MPa	26 MPa	32 MPa	40 MPa
<5,0	0,45	0,4	0,35	–
>5,0 ... 7,5	0,50	0,45	0,4	0,35
>7,5 ... 12,5	0,55	0,5	0,45	0,4
15,0	0,60	0,55	0,45	0,4

The dimensions D1 and DF are to be viewed in connection with the guide elements used.

Tolerance recommendation and dimension D2

The admissible gap width, tolerances, guide play and deflection of the guide under load are to be taken into account when designing D2.

For non-metallic guide profile ≤7,5

16 MPa			26 MPa			32 MPa			40 MPa		
Nominal Ø d	d	D	Nominal Ø d	d	D	Nominal Ø d	d	D	Nominal Ø d	d	D
8 ... 200	f8	H11	8 ... 200	f8	H11	8 ... 110	f8	H11	8 ... 110	f8	H11
						>110 ... 200	f7	H11	>110 ... 200	f7	H11

For non-metallic guide profile ≥7,5 <12,5

16 MPa			26 MPa			32 MPa			40 MPa		
Nominal Ø d	d	D	Nominal Ø d	d	D	Nominal Ø d	d	D	Nominal Ø d	d	D
≤380	f8	H10	≤220	f8	H10	≤170	f8	H10	≤180	f8	H10
>380 ... 590	f7	H10	>220 ... 900	f7	H10	>180 ... 950	f7	H10			

For non-metallic guide profile ≥12,5 <15

16 MPa			26 MPa			32 MPa			40 MPa		
Nominal Ø d	d	D	Nominal Ø d	d	D	Nominal Ø d	d	D	Nominal Ø d	d	D
≤1000	f8	H10	≤310	f8	H10	≤1000	f8	H10	≤1200	f7	H10
			>310 ... 1000	f7	H10						

For non-metallic guide profile ≥15 <25

16 MPa			26 MPa			32 MPa			40 MPa		
Nominal Ø d	d	D	Nominal Ø d	d	D	Nominal Ø d	d	D	Nominal Ø d	d	D
≤1200	f8	H10	≤400	f8	H10	≤1200	f7	H10	≤1200	f7	H10
			>400 ... 1200	f7	H10						

FITTING & INSTALLATION

Careful fitting is a prerequisite for the correct function of the seal.

MERKEL U-RING T 22

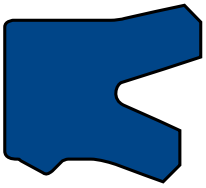

Merkel U-Ring T 22

PRODUCT DESCRIPTION

Merkel polyurethane U-ring with asymmetrical profile, shortened inner lip and second support edge and sealing edge as well as press fit at the outside diameter.

PRODUCT ADVANTAGES

Single-acting rod seal, also for standardised housings according to ISO 5597

- Highly wear-resistant
- Good media resistance
- Wide operating temperature range
- Very good static and dynamic tightness
- (Note: low deformation value, therefore not suitable for sealing systems).

APPLICATION

Earth moving equipment, support cylinders, marine hydraulics, mobile hydraulics. We recommend more modern series for new designs.

MATERIAL

Material	Code	Hardness
Novathan (polyurethane)	95 AU V142	95 Shore A

OPERATING CONDITIONS

Material	95 AU V142
	Temperature range in °C
Hydraulic oils HL, HLP	−30 ... +110
HFA fluids	+5 ... +50
HFB fluids	+5 ... +50
HFC fluids	−30 ... +40
HFD fluids	–
Water	+5 ... +50
HETG (rapeseed oil)	−30 ... +60
HEES (synthetic ester)	−30 ... +80
HEPG (glycol)	−30 ... +50
Mineral greases	−30 ... +110
Pressure p in MPa	40
Running speed v in m/s	0,5

Surface quality

Surface roughness	R_a	R_{max}
Sliding surface	0,05 ... 0,3 µm	≤2,5 µm
Groove base	≤1,6 µm	≤6,3 µm
Groove flanks	≤3,0 µm	≤15,0 µm

DESIGN NOTES

Please observe our general design notes.

Gap dimension

The decisive factor for the function of the seal is the largest gap dimension occurring during operation on the non-pressurised side of the seal.

Profile		Max. permissible gap dimension			
L	Profile	16 MPa	26 MPa	32 MPa	40 MPa
8 ... 13	5,0	0,50	0,40	0,35	–
11 ... 13	7,5	0,55	0,45	0,40	0,35
11 ... 16	10,0	0,60	0,50	0,45	0,40
≥16	12,5	0,60	0,50	0,45	0,40

Tolerance recommendation and dimension D2

The admissible gap width, tolerances, guide play and deflection of the guide under load are to be taken into account when designing D2.

Nominal Ø d	d	D
15 ... 160	f8	H10

FITTING & INSTALLATION

Careful fitting is a prerequisite for the correct function of the seal.

MERKEL U-RING T 23

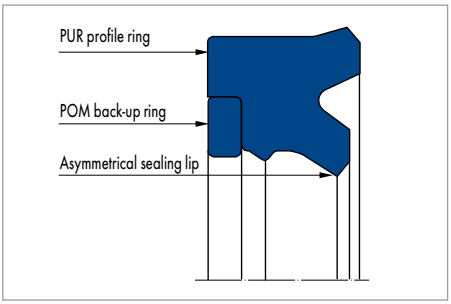

Merkel U-Ring T 23

PRODUCT DESCRIPTION

Two-piece Merkel seal set with shortened inner lip and active back-up ring with press fit at the outside diameter.

PRODUCT ADVANTAGES

The Merkel U-Ring T 23 is mainly used with high pressures and is designed for housings according to ISO 5597

- Bridges large gaps even with high pressures
- Wide operating temperature range
- Very good static and dynamic tightness
- High resistance to wear.

APPLICATION

Earth moving equipment, steel hydraulics engineering, heavy-duty mobile hydraulics, marine hydraulics, support cylinders, scrap cutters.

MATERIAL

Material	Code	Hardness
Polyurethane	95 AU V142	95 Shore A

Material	Code
Polyacetal	POM PO202

OPERATING CONDITIONS

Material	95 AU V142/POM PO202
	Temperature range in °C
Hydraulic oils HL, HLP	−30 ... +110
HFA fluids	+5 ... +50
HFB fluids	+5 ... +50
HFC fluids	−30 ... +40
HFD fluids	–
Water	+5 ... +50
HETG (rapeseed oil)	−30 ... +60
HEES (synthetic ester)	−30 ... +80
HEPG (glycol)	−30 ... +50
Mineral greases	−30 ... +110
Pressure p in MPa	50
Running speed v in m/s	0,1

Surface quality

Surface roughness	R_a	R_{max}
Sliding surface	0,05 ... 0,3 µm	≤2,5 µm
Groove base	≤1,6 µm	≤6,3 µm
Groove flanks	≤3,0 µm	≤15,0µm

Percentage contact area M_r >50% to max. 90% at cutting depth c = Rz/2 and reference line C ref = 0%.

DESIGN NOTES

Please observe our general design notes.

Gap dimension

The decisive factor for the function of the seal is the largest gap dimension occurring during operation on the non-pressurised side of the seal.

Tolerance recommendation and dimension D2

The admissible gap width, tolerances, guide play and deflection of the guide under load are to be taken into account when designing D2. Dimensions D1 and DF must be considered in connection with the guide element used.

		16 MPa			26 MPa			32 MPa			40 MPa		
Nominal Ø D	Profile	D	d	X_2	D	d	X_2	D	d	X_2	D	d	X_2
... 180	7,5 ... 8,5 (BR 3,5)	H10	f8	0,8	H10	f8	0,7	H10	f8	0,50	H10	f8	0,4
>180 ... 310	7,5 ... 15,0 (BR 5,0)	H10	f8	1,2	H10	f8	1,0	H10	f8	0,65	H10	f8	0,5
>310 ... 400	12,5 ... 15,0 (BR 7,5)	H10	f8	1,8	H10	f8	1,4	H10	f8	0,90	H10	f8	0,7

FITTING & INSTALLATION

Careful fitting is a prerequisite for the correct function of the seal. Dimensions listed in the table of dimensions with "h" can be fitted by hand into plunge-cut grooves. Articles identified with "w" can be easily fitted into plunge-cut grooves with a fitting tool. We will be pleased to supply a design drawing for this on enquiry.

MERKEL U-RING T 24

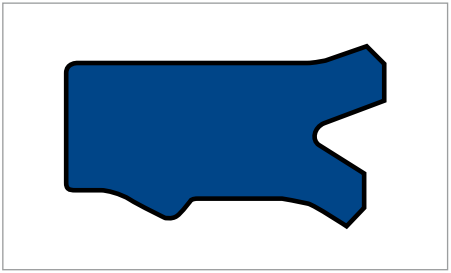

Merkel U-Ring T 24

PRODUCT DESCRIPTION

Merkel U-ring with asymmetrical profile, inner lip set back, additional support edge and sealing edge and press fit at the outside diameter.

PRODUCT ADVANTAGES

Single-acting rod seal especially for telescopic cylinders and radially restricted housings

- Very good static and dynamic tightness
- Additional sealing edge prevents ingress of dirt to a large degree
- (Note: low dynamic deformation value, therefore not suitable for sealing systems).

APPLICATION

Telescopic cylinders.

MATERIAL

Material	Code	Hardness
Novathan (polyurethane)	95 AU V142	95 Shore A

OPERATING CONDITIONS

Material	95 AU V142
	Temperature range in °C
Hydraulic oils HL, HLP	−30 ... +110
HFA fluids	+5 ... +50
HFB fluids	+5 ... +50
HFC fluids	−30 ... +40
HFD fluids	–
Water	+5 ... +50
HETG (rapeseed oil)	−30 ... +60
HEES (synthetic ester)	−30 ... +80
HEPG (glycol)	−30 ... +50
Mineral greases	−30 ... +110
Pressure p in MPa	40
Running speed v in m/s	0,5

Surface quality

Surface roughness	R_a	R_{max}
Sliding surface	0,05 ... 0,3 µm	≤2,5 µm
Groove base	≤1,6 µm	≤6,3 µm
Groove flanks	≤3,0 µm	≤15,0 µm

DESIGN NOTES

Please observe our general design notes.

Gap dimension

The decisive factor for the function of the seal is the largest gap dimension occurring during operation on the non-pressurised side of the seal.

Profile	Max. permissible gap dimension		
	16 MPa	26 MPa	32 MPa
4	0,50	0,40	0,35

Tolerance recommendation and dimension D2

The admissible gap width, tolerances, guide play and deflection of the guide under load are to be taken into account when designing D2.

	16 MPa		26 MPa		32 MPa	
Nominal Ø d	d	D	d	D	d	D
45 ... 171	f8	H8	f8	H8	f8	H8

FITTING & INSTALLATION

Careful fitting is a prerequisite for the correct function of the seal.

MERKEL U-RING TM 20

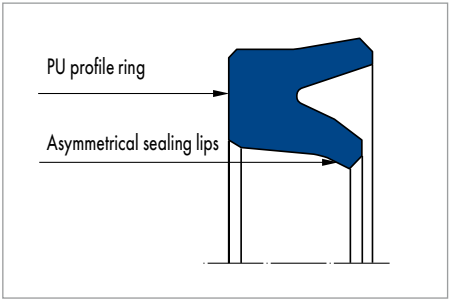

Merkel U-Ring TM 20

PRODUCT DESCRIPTION

Merkel U-ring with asymmetrical profile, inner lip set back and press fit at the outside diameter.

PRODUCT ADVANTAGES

Single-acting rod seal for hydraulic cylinders. With new production technology even special sizes can be manufactured quickly and flexibly

- Good media resistance
- Wide operating temperature range
- Very good static and dynamic tightness
- Use as an individual seal or as a secondary seal in sealing systems possible
- Large range of dimensions
- No moulding tools.

APPLICATION

Injection moulding machines, presses, heavy machinery manufacture, large cylinders.

MATERIAL

Ø range <500

Material	Code	Hardness	Colour
Polyurethane	95 AU V142	95 Shore A	Blue

Ø range >500

Material	Code	Hardness	Colour
Polyurethane	93 AU V168	93 Shore A	Red

OPERATING CONDITIONS

Material	95 AU V142	93 AU V168
	Temperature range in °C	
Hydraulic oils HL, HLP	−30 ... +110	−25 ... +100
HFA fluids	+5 ... +50	+5 ... +60
HFB fluids	+5 ... +50	+5 ... +60
HFC fluids	−30 ... +40	−25 ... +40
HFD fluids	–	–
Water	+5 ... +50	+5 ... +60

Material	95 AU V142	93 AU V168
	Temperature range in °C	
HETG (rapeseed oil)	−30 ... +60	−25 ... +60
HEES (synthetic ester)	−30 ... +80	−25 ... +80
HEPG (glycol)	−30 ... +50	−25 ... +50
Mineral greases	−30 ... +110	−25 ... +100
Pressure p in MPa	40	
Running speed v in m/s	0,5*	

* If TM 20 is fitted in a sealing system as a secondary seal, higher running speeds can be allowed.

Surface quality

Surface roughness	R_a	R_{max}
Sliding surface	0,05 ... 0,3 µm	≤2,5 µm
Groove base	≤1,6 µm	≤6,3 µm
Groove flanks	≤3,0 µm	≤15,0 µm

Percentage contact area M_r >50% to max. 90% at cutting depth c = Rz/2 and reference line C ref = 0%.

DESIGN NOTES

Please observe our general design notes.

Tolerance recommendation and dimension D2

D2 "System" is based on the use of Merkel TM 20 as a secondary seal in a sealing system. The specified D2 dimensions are based on the use of Merkel fabric-base laminate guide ring SB or metal guide. They provide high security against gap extrusion and also metal tarnish. If the stated operating parameters range is not fully exploited or only for a short period, larger D2 dimensions may be selected. With high lateral forces or high deflection we recommend a metal guide.

Housing recommendations for new designs

Merkel U-Ring TM 20 primary seal

d	D	L	C
>320 ... 600	d + 30	25	11
>320 ... 720	d + 40	32	12
>720 ... 2000	d + 40	40	16

Merkel U-Ring TM 20 secondary seal in the sealing system

d	D	L	C
>320 ... 650	d + 20	16	8
>650 ... 950	d + 25	20	10
>950 ... 2000	d + 30	25	11

Tolerance recommendation for SB Guide Ring

<10 MPa				
Nominal Ø d	S	DF	d	D2
≤190	≤15	H8	f8	H10
>190 ... 320	≤15	H7	f8	H9
>320 ... 600	15	H7	f8	H8
>320 ... 720	20	H8	f8	H8
>720 ... 2000	≥25	H8	f8	H8

<25 MPa				
Nominal Ø d	S	DF	d	D2
>105 ... 320	≤15	H7	f8	H8
>320 ... 600	15	H6	f7	H7
>320 ... 720	20	H7	f7	H7
>720 ...2000	≥25	+0,05	f7	H7

<40 MPa				
Nominal Ø d	S	DF	d	D2
>85 ... 320	≤15	H6	f7	H7
>320 ... 600	15	H6	f6	H7
>320 ... 720	20	H6	f7	H6
>720 ... 2000	≥25	+0,05	f6	H6

System			
Nominal Ø d	DF**	d**	D2
<320	–	–	H11
>320	–	–	+0,4

* Profiles in accordance with "housing recommendations for new designs"
** Use fit or tolerance level of primary seal

Lead-in chamfers

Dimension C.

FITTING & INSTALLATION

The rod seals can be fitted into plunge-cut grooves by hand or with a fitting tool. In the case of different housings, e.g. in old plant, please ask our advisory service.

MERKEL U-RING TM 23

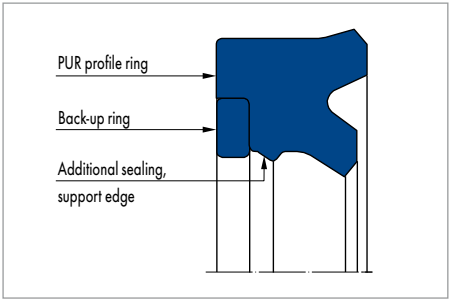

Merkel U-Ring TM 23

PRODUCT DESCRIPTION

The Merkel U-Ring TM 23 is specially designed for sealing the piston rods of plungers, pushers and subsidiary cylinders in self-advancing support systems.

PRODUCT ADVANTAGES

To meet the requirements of a higher radial deflection and larger gap bridging, the Merkel U-Ring TM 23 has been fitted with an increased pre-load and active back-up ring. The second sealing edge provides extra protection against the ingress of dirt particles.

- Good media resistance
- Very good static and dynamic tightness
- Large range of dimensions
- Bridges large gaps
- Highly wear-resistant.

APPLICATION

Mining.

MATERIAL

Material	Code	Hardness
Novathan (polyurethane)	95 AU V157/ 93 AU V167	95 Shore A/93 Shore A

OPERATING CONDITIONS

Material	95 AU V157/ 93 AU V167
	Temperature range in °C
HFA fluids/water	+5 ... +60
Pressure p in MPa	50
Running speed v in m/s	<0,1 *

Surface quality

Surface roughness	R_a	R_{max}
Sliding surface	0,05 ... 0,3 µm	≤2,5 µm
Groove base	≤1,6 µm	≤6,3 µm
Groove flanks	≤3,0 µm	≤15,0 µm

Percentage contact area M_r >50% up to max. 90% at cutting depth c = Rz/2 and reference line C ref = 0%.

Recommended profile

d	S	L
<60	6,0	9,6
60 ... 120	7,5	12,5
120 ... 200	10,0	16,0
200 ... 300	12,5	20,0
>300	15,0	22,0

Other dimensions are possible. Please ask.

DESIGN NOTES

Please observe our general design notes.

Gap dimension

The decisive factor for the function of the seal is the largest gap dimension occurring during operation on the non-pressurised side of the seal.

Profile		Max. permissible gap dimension			
L	Profile	16 MPa	26 MPa	32 MPa	50 MPa
12,5	7,5	0,8	0,7	0,50	0,4
>12,5 ... 16	>7,5 ... 10,0	1,2	1,0	0,65	0,5
>16	>10,0	1,8	1,4	0,90	0,7

Tolerance recommendation and dimension d2

The admissible gap width, tolerances, guide play and deflection of the guide under load are to be taken into account when designing d2.

Nominal Ø d	d	D
≤350	f7	H10

FITTING & INSTALLATION

The U-rings can be fitted into plunge-cut grooves by hand or with a fitting tool. We will be pleased to send you a design drawing for this on enquiry.

MERKEL U-RING SYPRIM SM

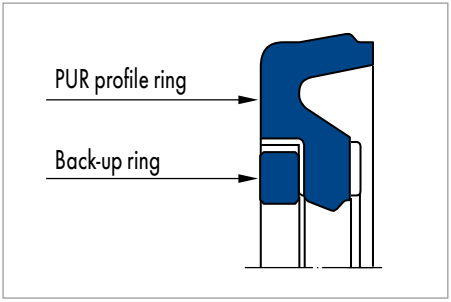

Merkel U-Ring Syprim SM

PRODUCT DESCRIPTION

Two-piece Merkel seal set for use as a primary rod seal. The Merkel Syprim SM seal set is always used in a sealing system in combination with U-ring (e.g. Merkel U-Ring T 20).

PRODUCT ADVANTAGES

The Merkel U-Ring Syprim SM is designed especially for use as a system seal

- Short primary seal
- No pressure enclosed between primary and secondary seal
- Low friction
- Highly wear-resistant
- Protection against extrusion through activated back-up ring.

APPLICATION

Earth moving equipment, agricultural machinery, injection moulding machines, industrial vehicles, cranes, standard cylinders.

MATERIAL

PUR profile ring

Material	Code	Hardness
Polyurethane	95 AU V142	95 Shore A

Back-up ring

Material	Code
Polyacetal	POM PO202

OPERATING CONDITIONS

Material	95 AU V142/POM PO202
	Temperature range in °C
Hydraulic oils HL, HLP	−30 ... +110
HFA fluids	+5 ... +50
HFB fluids	+5 ... +50
HFC fluids	−30 ... +40
HFD fluids	–
Water	+5 ... +50
HETG (rapeseed oil)	−30 ... +60
HEES (synthetic ester)	−30 ... +80
HEPG (glycol)	−30 ... +50
Mineral greases	−40 ... +110
Pressure p in MPa	40
Running speed v in m/s	0,5

Surface quality

Surface roughness	R_a	R_{max}
Sliding surface	0,05 ... 0,3 µm	≤2,5 µm
Groove base	≤1,6 µm	≤6,3 µm
Groove flanks	≤3,0 µm	≤15,0 µm

Percentage contact area M_r >50% to max. 90% at cutting depth c = Rz/2 and reference line C ref = 0%.

DESIGN NOTES

Please observe our general design notes.

Gap dimension

The decisive factor for the function of the seal is the largest gap dimension occurring during operation on the non-pressurised side of the seal.

Profile		Max. permissible gap dimension			
L	Profile	16 MPa	26 MPa	32 MPa	40 MPa
6,3	7,55	0,6	0,5	0,4	0,4
8,1	10,25	0,7	0,6	0,5	0,5

Tolerance recommendation and dimension D2

The admissible gap width, tolerances, guide play and deflection of the guide under load are to be taken into account when designing D2.

Nominal Ø d	d	D
45 ... 80	f8	H9
>80 ... 200	f8	H8

FITTING & INSTALLATION

Careful fitting is a prerequisite for the correct function of the seal.

MERKEL U-RING SEAL SET 0214

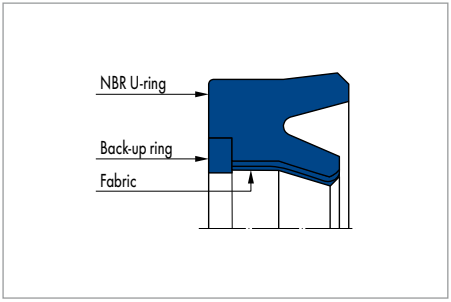

Merkel U-Ring Seal Set 0214

PRODUCT ADVANTAGES

Single-acting rod seal for use in hydraulics and pneumatics

- Low friction due to fabric reinforcement
- Large range of dimensions
- Protection against extrusion through activated back-up ring
- Low deformation value (not suitable for sealing systems)
- Easily installed in non-axial housings
- From 100 mm diameter.

APPLICATION

Injection moulding machines, iron and steel technology, presses, special cylinders, marine hydraulics, steel hydraulics engineering, scrap cutters.

PRODUCT DESCRIPTION

Two-piece Merkel seal set comprising an elastomer U-ring with an elastomer sealing edge, fabric reinforcement on the contact area and an active back-up ring.

MATERIAL

U-Ring

Material	Code
NBR	80 NBR B246
Cotton fabric	BI-NBR B4 B248

Back-up ring

D	Material	Code
<300 mm	Polyacetal POM	POM PO202
>300 mm	Polyamide	PA 6.G200

Other materials like PTFE bronze back-up ring on enquiry.

OPERATING CONDITIONS

Material	80 NBR B246/BI-NBR B4B248/ POM PO202	80 NBR B246/BI-NBR B4B248/ PA 6.G200
	Temperature range in °C	
Hydraulic oils HL, HLP	−30 ... +100	−30 ... +100
HFA fluids	+5 ... +60	+5 ... +60
HFB fluids	+5 ... +60	+5 ... +60
HFC fluids	−30 ... +60	−30 ... +60
HFD fluids	–	–
Water	+5 ... +100	+5 ... +100
HETG (rapeseed oil)	−30 ... +80	−30 ... +80
HEES (synthetic ester)	−30 ... +80	−30 ... +80
HEPG (glycol)	−30 ... +60	−30 ... +60
Mineral greases	−30 ... +100	−30 ... +100
Pressure p in MPa Hydraulic	25 or 40*	
Pressure p in MPa Pneumatic	5	
Running speed v in m/s	1,5	

* max. pressure depends on the profile.

For Merkel U-Ring Seal Sets 0214, if long strokes are traversed, the max. pressure should only be applied to the last part of the stroke (closing pressure); during the stroke max. 16 MPa.

Surface quality

Surface roughness	R_a	R_{max}
Sliding surface	0,05 ... 0,3 µm	≤2,5 µm
Groove base	≤1,6 µm	≤6,3 µm
Groove flanks	≤3,0 µm	≤15,0 µm

Percentage contact area M_r >50% to max. 90% at cutting depth c = Rz/2 and reference line C ref = 0%.

DESIGN NOTES

Please observe our general design notes.

Gap dimension X2

The decisive factor for the function of the seal is the largest gap dimension occurring during operation on the non-pressurised side of the seal.

Profile	16 MPa			26 MPa			32 MPa			40 MPa		
	D	d	X2	D	d	X2	D	d	X2	D	d	X2
<15	H10	f7	1,2	H10	f7	1,0	H10	f7	0,65	H10	f7	0,5
>15	H10	f7	1,8	H10	f7	1,4	H10	f7	0,9	H10	f7	0,7

The dimensions D1 and DF are to be viewed in connection with the sealing component used.

Tolerance recommendation

The admissible gap width, tolerances, guide play and deflection of the guide under load are to be taken into account when designing d2.

FITTING & INSTALLATION

Careful fitting is a prerequisite for the correct function of the seal.

MERKEL U-RING SEAL SET 0216

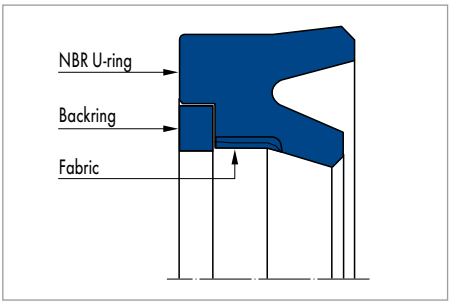

Merkel U-Rring Seal Set 0216

PRODUCT DESCRIPTION

Two-piece Merkel seal set comprising an elastomer U-ring with an elastomer sealing edge, fabric reinforcement on the contact area and an active back-up ring. Merkel U-Ring Seal Set 0216 can also be used for pneumatic applications.

MATERIAL

U-Ring

Material	Code
NBR	80 NBR B246
Cotton fabric	BI-NBR B4 B248

Back-up ring

D	Material	Code
<300 mm	Polyacetal POM	POM PO202
>300 mm	Polyamide	PA 6.G200

Other materials like PTFE bronze back-up ring on enquiry.

PRODUCT ADVANTAGES

Single-acting rod seal for use in hydraulics and pneumatics

- Low friction due to fabric part
- Large range of dimensionse
- Protection against extrusion through activated back-up ring
- Low deformation value (not suitable for sealing systems)
- Easily installed in non-axial housings
- From 100 mm diameter.

APPLICATION

Pneumatic applications.

OPERATING CONDITIONS

Material	80 NBR B246/BI-NBR B4B248/ POM PO202	80 NBR B246/BI-NBR B4B248/ PA 6.G200
	Temperature range in °C	
Hydraulic oils HL, HLP	−30 ... +100	−30 ... +100
HFA fluids	+5 ... +60	+5 ... +60
HFB fluids	+5 ... +60	+5 ... +60
HFC fluids	−30 ... +60	−30 ... +60
HFD fluids	–	–
Water	+5 ... +100	+5 ... +100
HETG (rapeseed oil)	−30 ... +80	−30 ... +80
HEES (synthetic esters)	−30 ... +80	−30 ... +80
HEPG (glycol)	−30 ... +60	−30 ... +60
Mineral greases	−30 ... +100	−30 ... +100
Pressure p in MPa Hydraulic	25 oder 40*	
Pressure p in MPa Pneumatic	5	
Running speed v in m/s	1,5	

* max. pressure depends on the profile

For Merkel U-Ring Seal Sets 0216, if long strokes are traversed, the max. pressure should only be applied to the last part of the stroke (closing pressure); during the stroke max. 16 MPa.

Surface quality

Surface roughness	R_a	R_{max}
Sliding surface	0,05 ... 0,3 µm	≤2,5 µm
Groove base	≤1,6 µm	≤6,3 µm
Groove flanks	≤3,0 µm	≤15,0 µm

Percentage contact area M_r >50% to max. 90% at cutting depth c = Rz/2 and reference line C ref = 0%.

DESIGN NOTES

Please observe our general design notes.

Gap dimension X2

The decisive factor for the function of the seal is the largest gap dimension occurring during operation on the non-pressurised side of the seal.

Profile	16 MPa			26 MPa			32 MPa			40 MPa		
	D	d	X2	D	d	X2	D	d	X2	D	d	X2
<15	H10	f7	1,2	H10	f7	1,0	H10	f7	0,65	H10	f7	0,5
>15	H10	f7	1,8	H10	f7	1,4	H10	f7	0,9	H10	f7	0,7

The dimensions D1 and DF are to be viewed in connection with the sealing component used.

Tolerance recommendation

The admissible gap width, tolerances, guide play and deflection of the guide under load are to be taken into account when designing d2.

FITTING & INSTALLATION

Careful fitting is a prerequisite for the correct function of the seal.

MERKEL U-RING TMP 20

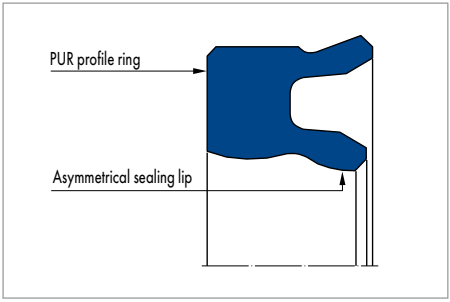

Merkel U-Ring TMP 20

PRODUCT ADVANTAGES

Rod seal for heavy-duty pneumatic stresses and strains and high operating requirements. New production technology allows special sizes to be manufactured quickly and flexibly. The Merkel U-rings are designed for pressure on one side

- High tightness
- Suitable for dry air
- Large range of dimensions
- No mould tools required.

APPLICATION

Presses, large cylinders.

PRODUCT DESCRIPTION

Single-acting rod seal made of abrasion-resistant polyurethane.

MATERIAL

Ø range <500 mm

Material	Code	Hardness	Colour
Polyurethane	93 AU V167	93 Shore A	Red

Ø range 500 mm

Material	Code	Hardness	Colour
Polyurethane	93 AU V168	93 Shore A	Red

OPERATING CONDITIONS

Material	93 AU V167/93 AU V168
	Temperature range in °C
HFA fluids/water	–10 ... +80
Pressure p in MPa	2*
Running speed v in m/s	1,5

* short version <1,2 MPa

Surface quality

Surface roughness	R_a	R_{max}
Sliding surface	0,05 ... 0,3 µm	≤2,5 µm
Groove base	≤1,6 µm	≤6,3 µm
Groove flanks	≤3,0 µm	≤15,0 µm

Percentage contact area M_r >50% to max. 90% at cutting depth c = Rz/2 and reference line C ref = 0%. Abrasive surfaces, ridges, scratches and blow-holes must be avoided.

DESIGN NOTES

Please observe our general design notes.

Housing recommendations for new designs

d	D	L	C
>50 ... 200	d + 20	16	8,5
>100 ... 320	d + 25	20	10,0
>150 ... 630	d + 30	24	11,5
>400 ... 800	d + 40	32	12,5
>800 ... 1200	d + 50	40	16,0
>1000 ... 2000	d + 60	48	18,0

FITTING & INSTALLATION

The rod seals can be inserted into plunge-cut grooves by hand or with a fitting tool. In the case of different housings, such as in old plant, please ask our advisory service. For optimum running-in and operation behaviour the U-rings should be lightly oiled or greased prior to use (initial lubrication).

MERKEL OMEGAT OMS-MR

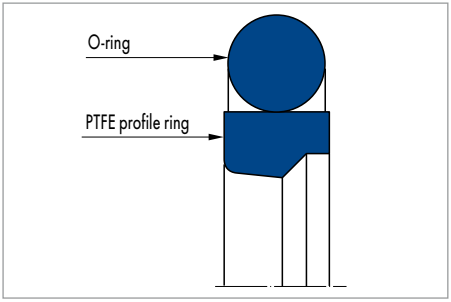

Merkel Omegat OMS-MR

PRODUCT ADVANTAGES

Rod seal used in particular in a sealing system
- Very high resistance to pressure
- Good thermal conductivity
- Very good extrusion resistance
- High resistance to abrasion
- Low friction, free of stick-slip.

APPLICATION

Industrial vehicles, handling equipment, agricultural machinery, cranes, injection moulding machines, presses, marine hydraulics, control and regulation equipment, mills.

PRODUCT DESCRIPTION

Two-piece Merkel seal set made of PTFE profile ring with one O-ring as a pre-load component.

MATERIAL

PTFE profile ring

Material	Code
PTFE bronze compound	PTFE B602
PTFE glass/MoS_2 compound	PTFE GM201

O-ring

Material	Code	Hardness
NBR	70 NBR B276	70 Shore A
FKM	70 FKM K655	70 Shore A

OPERATING CONDITIONS

Material	PTFE GM201/NBR	PTFE B602/70 FKM K655	PTFE B602/70 NBR B276
	Temperature range in °C		
Hydraulic oils HL, HLP	−30 ... +100	−10 ... +200	−30 ... +100

Material	PTFE GM201/NBR	PTFE B602/70 FKM K655	PTFE B602/70 NBR B276
	Temperature range in °C		
HFA fluids	+5 ... +60	–	–
HFB fluids	+5 ... +60	–	–
HFC fluids	−30 ... +60	–	–
HFD fluids	–	−10 ... +200	–
Water	+5 ... +100	–	–
HETG (rapeseed oil)	−30 ... +80	−10 ... +80	−30 ... +80
HEES (synthetic ester)	−30 ... +80	−10 ... +100	−30 ... +80
HEPG (glycol)	−30 ... +60	−10 ... +80	−30 ... +60
Mineral greases	−30 ... +100	−10 ... +200	−30 ... +100
Pressure p in MPa	40		
Running speed v in m/s	5		

Surface quality

Surface roughness	R_a	R_{max}
Sliding surface	0,05 ... 0,3 µm	≤2,5 µm
Groove base	≤1,6 µm	≤6,3 µm
Groove flanks	≤3,0 µm	≤15,0 µm

Percentage contact area M_r >50% to max. 90% at cutting depth c = Rz/2 and reference line C ref = 0%.

DESIGN NOTES

Please observe our general design notes.

Gap dimension

The decisive factor for the function of the seal is the largest gap dimension occurring during operation on the non-pressurised side of the seal.

Profile		Max. permissible gap dimension			
L	Profile	16 MPa	26 MPa	32 MPa	40 MPa
2,2	2,45	0,35	0,30	–	–
3,2	3,65	0,40	0,35	–	–
4,2	5,35	0,50	0,40	0,30	–
6,3	7,55	0,55	0,45	0,35	0,30
8,1	10,25	0,60	0,50	0,40	0,40
8,1	12,00	0,70	0,60	0,55	0,50
9,5	13,65	0,75	0,65	0,60	0,55

Tolerance recommendation and dimension D2

The admissible gap width, tolerances, guide play and deflection of the guide under load are to be taken into account when designing D2.

	16 MPa		26 MPa		32 MPa		40 MPa	
Nominal Ø d	d	D	d	D	d	D	d	D
≤80	f8	H9	f8	H9	f7	H9	f7	H7
>80 ... 500	f8	H8	f8	H8	f7	H8	f7	H8
>500 ... 1450	f8	H8	f7	H8	f7	H8	f7	H8

The dimensions D1 and DF are to be viewed in connection with the guide elements used.

FITTING & INSTALLATION

Careful fitting is a prerequisite for the correct function of the seal.

MERKEL OMEGAT OMS-MR PR

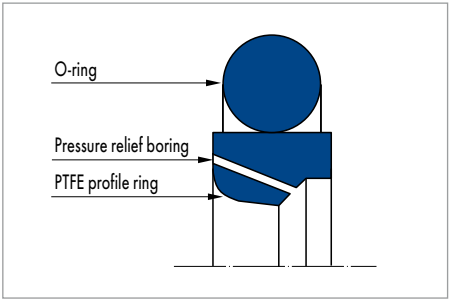

Merkel Omegat OMS-MR PR

PRODUCT DESCRIPTION

Two-component Merkel seal set for sealing piston rods, consisting of one PTFE profile ring with integrated pressure-relief function and an elastomer ring as pre-load component. Patented product design (patent no.: DE 10117662 CI).

PRODUCT ADVANTAGES

- Can be exchanged with operating environments of the Merkel Omegat OMS-MR Series. Increased operating reliability of sealing systems with demanding operating parameters (no continuously pressure build-up in gap area)
- Extended service life of sealing systems by long-term stability (reduced loading of the sealing system by minimised friction and wear).

APPLICATION

- Primary seal in a sealing system - longer stroke (greater than 400 mm)
- High stroke speed when piston rod extends (greater than 0,5 m/s)
- High speed differences depending on the direction of movement (V out greater than 8xV in)
- Fast pressure drop in main area
- Large diameter (greater than 310 mm).

Injection moulding machines, mills, agricultural machinery, presses, earth moving equipment, large cylinders, industrial vehicles, cranes, control and regulation equipment, marine hydraulics.

MATERIAL

PTFE profile ring

Material	Code	Colour
PTFE bronze compound	PTFE B602	Brown
PTFE glass MoS_2 compound	PTFE GM201	Grey
PTFE carbon fibre compound	PTFE C104	Dark grey

O-ring

Material	Code
Nitrile rubber	NBR

Other combinations of materials are available on enquiry.

OPERATING CONDITIONS

Material	PTFE B602/NBR	PTFE GM201/NBR PTFE C104/NBR
	Temperature range in °C	
Hydraulic oils HL, HLP	−30 ... +100	−30 ... +100
HFA fluids	–	+5 ... +60
HFB fluids	–	+5 ... +60
HFC fluids	–	−30 ... +60
HFD fluids	–	–
Water	–	+5 ... +100
HETG (rapeseed oil)	−30 ... +80	−30 ... +80
HEES (synthetic ester)	−30 ... +80	−30 ... +80
HEPG (glycol)	−30 ... +60	−30 ... +60
Mineral greases	−30 ... +100	−30 ... +100
Pressure p in MPa	40	
Running speed v in m/s	5	

The specified values are maximum values and must not be applied simultaneously.

Surface quality

Surface roughness	R_a	R_{max}
Sliding surface	0,05 ... 0,3 µm	≤2,5 µm
Groove base	≤1,6 µm	≤6,3 µm
Groove flanks	≤3,0 µm	≤15,0 µm

Percentage contact area M_r >50% to max. 90% at cutting depth c = Rz/2 and reference line C ref = 0%.

Gap dimension

The dimension D2 is determined under load with reference to the maximum permissible extrusion gap, the tolerance levels, the guide play and the compressive deflection of the guide. The maximum permissible extrusion gap with one-sided position of the piston rod is primarily determined by the maximum operating pressure and the temperature-dependent form stability of the sealing material.

Profile		Max. permissible gap dimension			
L	Profile	16 MPa	26 MPa	32 MPa	40 MPa
4,2	5,35	0,50	0,40	0,30	–
6,3	7,55	0,55	0,45	0,35	0,30
8,1	10,25	0,60	0,50	0,40	0,40
8,1	12,00	0,70	0,60	0,55	0,50
9,5	13,65	0,75	0,65	0,60	0,55

Profile		Max. permissible gap dimension			
L	Profile	16 MPa	26 MPa	32 MPa	40 MPa
8,1	12,00	0,70	0,60	0,55	0,50
9,5	13,65	0,75	0,65	0,60	0,55

At an operating temperature above 90°C and simultaneously applied operating pressure above 26 MPa we recommend the use of the material compounds PTFE B602 and PTFE C104.

MODE OF OPERATION

The Omegat OMS-MR PR has an integrated pressure-relief function. Once the gap pressure pz is greater than the pressure in the main area pH (e.g. caused by poor speed conditions during extension and retraction) the seal is reliably relieved. The sealing function of the Omegat OMS-MR PR is similar to the tried-and-trusted Omegat seals.

Position in the operating environment
pz < pH

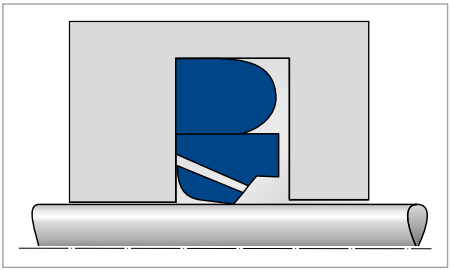

Position in the operating environment during pressure relief

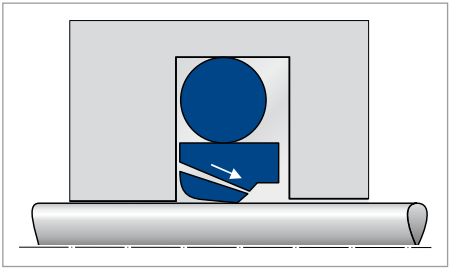

pz = pressure in the gap area; pH= pressure in the main area

FITTING & INSTALLATION

Careful fitting is a prerequisite for the correct function of the seal.

MERKEL OMEGAT OMS-S

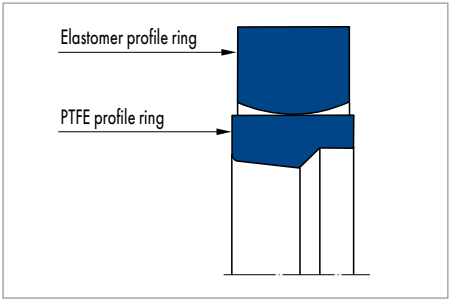

Merkel Omegat OMS-S

PRODUCT DESCRIPTION

Two-piece Merkel seal set for sealing piston rods, consisting of a profile ring with an elastomer profile ring as a pre-load component.

PRODUCT ADVANTAGES

Merkel Omegat OMS-S is designed especially for larger diameters and heavy duty hydraulic applications

- Very high resistance to pressure
- Very good extrusion resistance
- Design prevents twisting
- High contact pressure due to elastomer profile ring
- High resistance to abrasion
- Low friction, free of stick-slip.

APPLICATION

Injection moulding machines, steel hydraulics engineering, marine hydraulics, mills, presses, manipulators, large cylinders.

MATERIAL

PTFE profile ring

Material	Code
PTFE glass MoS_2 compound	PTFE GM201

Elastomer profile ring

Werkstoff	Bezeichnung	Härte
Nitrile rubber NBR	80 NBR B246	80 Shore A

OPERATING CONDITIONS

Material	PTFE GM201/NBR
	Temperature range in °C
Hydraulic oils HL, HLP	−30 ... +100
HFA fluids	+5 ... +60
HFB fluids	+5 ... +60
HFC fluids	−30 ... +60
HFD fluids	–
Water	+5 ... +100
HETG (rapeseed oil)	−30 ... +80
HEES (synthetic ester)	−30 ... +80
HEPG (glycol)	−30 ... +60
Mineral greases	−30 ... +100
Pressure p in MPa	40
Running speed v in m/s	5

Surface quality

Surface roughness	R_a	R_{max}
Sliding surface	0,05 ... 0,3 µm	≤2,5 µm
Groove base	≤1,6 µm	≤6,3 µm
Groove flanks	≤3,0 µm	≤15,0 µm

Percentage contact area M_r >50% up to max. 90% at cutting depth c = Rz/2 and reference line C ref = 0%.

DESIGN NOTES

Please observe our general design notes.

Gap dimension

The decisive factor for the function of the seal is the largest gap dimension occurring during operation on the non-pressurised side of the seal. The permissible value is determine by the pressure as well as the profile width and profile height.

Profile		Max. permissible gap dimension			
L	Profile	16 MPa	26 MPa	32 MPa	40 MPa
10,0	10,0	0,75	0,50	0,40	0,40
12,5	12,5	0,75	0,65	0,55	0,50
15,0	15,0	0,75	0,65	0,55	0,50
17,5	17,5	0,75	0,65	0,55	0,50
20,0	20,0	0,80	0,70	0,60	0,55

Tolerance recommendation and dimension D2

The admissible gap width, tolerances, guide play and compressive deflection of the guide under load must be considered in the design of D2.

	16 MPa		26 MPa		32 MPa		40 MPa	
Nominal Ø d	d	D	d	D	d	D	d	D
50 ... 200	f8	H8	f8	H8	f7	H8	f7	H8
>200 ... 300	f8	H8	f8	H8	f8	H8	f8	H8
>300 ... 530	f8	H8	f8	H8	f8	H8	f7	H8
>530 ... 1150	f8	H8	f8	H8	f7	H8	f8	H8

FITTING & INSTALLATION

When fitting the Omegat OMS-S the elastomer profile ring is first placed in the housing groove, then the profile ring is deformed to a kidney shape and sprung into place.
During this process it is to be ensured no sharp kinks are produced in the PTFE profile ring and that the sealing edge is correctly arranged in relation to the direction of the pressure. The entire fitting operation is only allowed to be performed over rounded edges.

MERKEL OMEGAT OMS-S PR

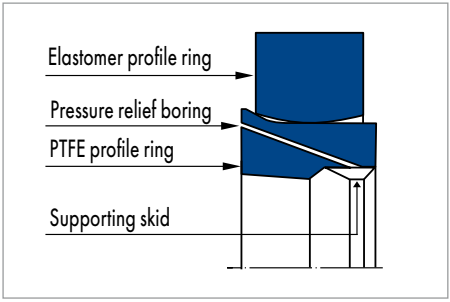

Merkel Omegat OMS-S PR

PRODUCT DESCRIPTION

Two-component Merkel seal set for sealing piston rods, consisting of one PTFE profile ring with integrated pressure-relief function and skid with an elastomer profile ring as pre-load component. Patented product design (patent no.: DE 10117662 CI).

PRODUCT ADVANTAGES

- Replaceable for operating environments of the Merkel Omegat OMS-S series
- Increased reliability of sealing systems under demanding operating parameters (no continuous pressure build-up in gap area)
- Extended service life of sealing systems by long-term stability (reduced loading of the sealing system by minimised friction and wear).

APPLICATION

- Primary seal in one sealing system
- Long stroke (>400 mm)
- High stroke speed when piston rod extends (>0,5 m/s)
- High speed differences depending on the direction of movement ($v_{out} > 8 \times v_{in}$)
- Fast pressure drop in main area
- Large diameter (>310 mm).

Injection moulding machines, mills, earth moving equipment, presses, steel hydraulics engineering, large cylinders.

MATERIAL

PTFE profile ring

Material	Code	Colour
PTFE bronze compound	PTFE B602	Brown
PTFE glass MoS_2 compound	PTFE GM201	Grey
PTFE carbon fibre compound	PTFE C104	Dark grey

Elastomer profile ring

Material	Code
Nitrile rubber	NBR

Other materials are available on enquiry.

OPERATING CONDITIONS

Material	PTFE B602/NBR	PTFE GM201/NBR PTFE C104/NBR
	Temperature range in °C	
Hydraulic oils HL, HLP	−30 ... +100	−30 ... +100
HFA fluids	–	+5 ... +60
HFB fluids	–	+5 ... +60
HFC fluids	–	−30 ... +60
HFD fluids	–	–
Water	–	+5 ... +100
HETG (rapeseed oil)	−30 ... +80	−30 ... +80
HEES (synthetic ester)	−30 ... +80	−30 ... +80
HEPG (glycol)	−30 ... +60	−30 ... +60
Mineral greases	−30 ... +100	−30 ... +100
Pressure p in MPa	40	
Running speed v in m/s	5	

The specified values are maximum values and must not be applied simultaneously.

Surface quality

Surface roughness	R_a	R_{max}
Sliding surface	0,05 ... 0,3 µm	≤2,5 µm
Groove base	≤1,6 µm	≤6,3 µm
Groove flanks	≤3,0 µm	≤15,0 µm

Percentage contact area M_r >50% to max. 90% at cutting depth c = Rz/2 and reference line C ref = 0%.

Surface quality

The long-term behaviour of the sealed component as well as the security against early failures are primarily determined by the quality of the counter-acting surface. This means that the surface must be precisely described and evaluated. Based on current knowledge we recommend supplementing the above definition of the surface quality of the sliding surface with the quantities in the following table. The previous general description of the material component is significantly improved with the new quantities from the material component, particularly with reference to the abrasiveness of the surface.

DESIGN NOTES

Please observe our general design notes.

Sliding surfaces

Characteristic value	Limit position
R_a	>0,05 mm ... 0,30 mm
R_{max}	<2,50 mm
R_{pkx}	<0,50 mm
R_{pk}	<0,50 mm
R_k	>0,25 mm ... 0,70 mm
R_{vk}	>0,20 mm ... 0,65 mm
R_{vkx}	>0,20 mm ... 2,00 mm

The limit values listed in the table are not currently applicable for ceramic or partial ceramic counter-surfaces.

Tolerances

D
H7

Gap dimension

Dimension D2 is determined with reference to the maximum permissible extrusion clearance, tolerances, guide play and compressive deflection of the guide under load. The maximum permissible extrusion gap with single position of the piston rod is primarily determined by the maximum operating pressure and the temperature-dependent form stability of the sealing material.

Profile		Max. permissible gap dimension			
L	Profile	16 MPa	26 MPa	32 MPa	40 MPa
12,5	12,5	0,75	0,65	0,55	0,50
15,0	15,0	0,75	0,65	0,55	0,50
17,5	17,5	0,75	0,65	0,55	0,50
20,0	20,0	0,80	0,70	0,60	0,55

At an operating temperature above 90°C and simultaneously applied operating pressure above 26 MPa we recommend the use of the material compounds PTFE B602 and PTFE C104.

MODE OF OPERATION

The Omegat OMS-S PR has a defined pressure-relief function. Once the gap pressure pz becomes greater than the pressure in the main area pH the seal reliably relieves the seal.

Position in operating environment
pz < pH

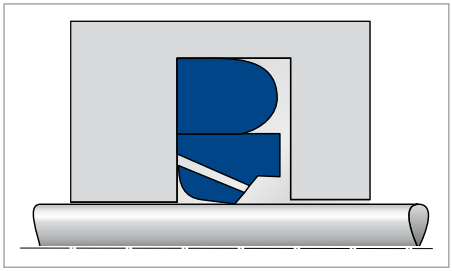

Position in operating environment during pressure relief

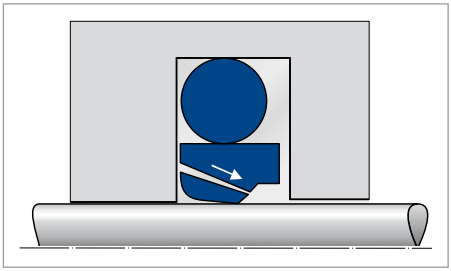

pz = pressure in gap area; pH= pressure in main area

FITTING & INSTALLATION

Careful fitting is a prerequisite for the correct function of the seal.

MERKEL COMPACT SEAL KI 310

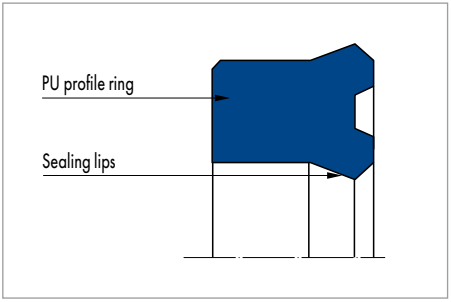

Merkel Compact Seal KI 310

PRODUCT ADVANTAGES

Single-acting rod seal for standardised housings, amongst others, according to ISO 5597

- Very good static and dynamic tightness
- Compact compression, higher surface roughness in the groove base is permitted
- Designed for radially restricted housings.

APPLICATION

Earth moving equipment, industrial vehicles, agricultural machinery, cranes, injection moulding machines, telescopic cylinders, steering cylinders, loading platforms.

PRODUCT DESCRIPTION

Merkel compact seal with asymmetrical profile and press fit at the outside diameter.

MATERIAL

Material	Code	Hardness
Polyurethane	94 AU 925	94 Shore A

OPERATING CONDITIONS

Material	94 AU 925
	Temperature range in °C
Hydraulic oils HL, HLP	−30 ... +110
HFA fluids	+5 ... +50
HFB fluids	+5 ... +50
HFC fluids	−30 ... +40
HFD fluids	–
Water	+5 ... +40
HETG (rapeseed oil)	−30 ... +60
HEES (synthetic ester)	−30 ... +80
HEPG (glycol)	−30 ... +40
Mineral greases	−30 ... +110
Pressure p in MPa	40
Running speed v in m/s	0,5

Surface quality

Surface roughness	R_a	R_{max}
Sliding surface	0,05 ... 0,3 µm	≤2,5 µm
Groove base	≤2 µm	≤10,0 µm
Groove flanks	≤3 µm	≤15,0 µm

Percentage contact area M_r >50% to max. 90% at cutting depth c = Rz/2 and reference line C ref = 0%.

DESIGN NOTES

Please observe our general design notes.

Gap dimension

The decisive factor for the function of the seal is the largest gap dimension occurring during operation on the non-pressurised side of the seal.

Profile	Max. permissible gap dimension			
	16 MPa	26 MPa	32 MPa	40 MPa
≤4,0	0,45	0,35	0,30	0,25
>4,0 ... 6,0	0,50	0,40	0,35	0,30

Tolerance recommendation and dimension D2

The admissible gap width, tolerances, guide play and deflection of the guide under load are to be taken into account when designing D2.

Nominal Ø d	d	D
0 ... 145	f8	H11

FITTING & INSTALLATION

Careful fitting is a prerequisite for the correct function of the seal.

MERKEL COMPACT SEAL KI 320

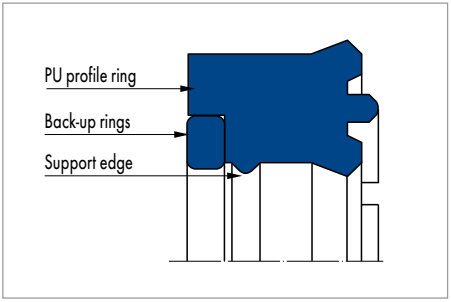

Merkel Compact Seal KI 320

PRODUCT DESCRIPTION

Merkel compact seal with integrated back-up ring, additional support edge and sealing edge, components for axial fixing in the housing and press fit at the outside diameter.

PRODUCT ADVANTAGES

Single-acting rod seal for heavy duty applications, dimensions for standardised housings, amongst others, according to ISO 5597

- Very good static and dynamic tightness
- High pressures and larger gap widths permissible
- Compact compression, higher surface roughness in the groove base possible
- Additional sealing edge prevents ingress of dirt to a large degree
- Low deformation value, use in combination with single-acting wipers recommended.

APPLICATION

Earth moving equipment, cranes, telescopic cylinders, support cylinders, presses.

MATERIAL

Sealing ring

Material	Code	Hardness
Polyurethane	94 AU 925	94 Shore A

Back-up ring

Material	Code
Polyacetal	POM 992020

OPERATING CONDITIONS

Material	94 AU 925
	Temperature range in °C
Hydraulic oils HL, HLP	−30 ... +110
HFA fluids	+5 ... +50
HFB fluids	+5 ... +50
HFC fluids	−30 ... +40
HFD fluids	–
Water	+5 ... +40
HETG (rapeseed oil)	−30 ... +60
HEES (synthetic ester)	−30 ... +60
HEPG (glycol)	−30 ... +40
Mineral greases	−30 ... +110
Pressure p in MPa	40
Running speed v in m/s	0,5

Surface quality

Surface roughness	R_a	R_{max}
Sliding surface	0,05 ... 0,3 µm	≤2,5 µm
Groove base	≤2 µm	≤10 µm
Groove flanks	≤3 µm	≤15 µm

Percentage contact area M_r >50% up to max. 90% at cutting depth c = Rz/2 and reference line C ref = 0%.

DESIGN NOTES

Please observe our general design notes.

Gap dimension

The decisive factor for the function of the seal is the largest gap dimension occurring during operation on the non-pressurised side of the seal.

Profile	Max. permissible gap dimension			
	26 MPa	32 MPa	40 MPa	50 MPa
≤80	0,60	0,535	0,45	0,35
>80	0,65	0,600	0,60	0,40

Tolerance recommendation and dimension D2

The admissible gap width, tolerances, guide play and deflection of the guide under load are to be taken into account when designing D2.

Nominal Ø d	d	D
40 ... 140	f8	H11

FITTING & INSTALLATION

Careful fitting is a prerequisite for the correct function of the seal.

MERKEL COMPACT SEAL S 8

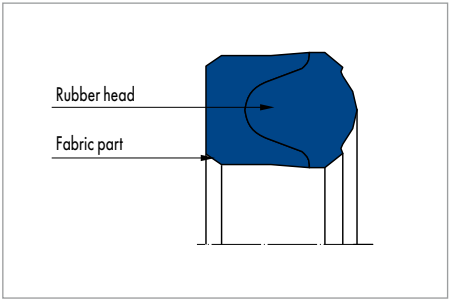

Merkel Compact Seal S 8

PRODUCT DESCRIPTION

Single-piece rod seal with a rubber head set in the fabric part.

PRODUCT ADVANTAGES

Compact rod seal, also for standardised housings according to ISO 5597

- Easy to fit
- Excellent sealing effect also in the lower pressure range
- Low friction due to the fabric part.

APPLICATION

Standard cylinders, telescopic cylinders, machine tools, spindle seals.

MATERIAL

Material	Code	Hardness
Nitrile rubber NBR	70 NBR B209	70 Shore A

OPERATING CONDITIONS

Material	70 NBR B209
	Temperature range in °C
Hydraulic oils HL, HLP	−30 ... +100
HFA fluids	+5 ... +60
HFB fluids	+5 ... +60
HFC fluids	−30 ... +60
HFD fluids	–
Water	+5 ... +100
HETG (rapeseed oil)	−30 ... +80
HEES (synthetic esters)	−30 ... +80
HEPG (glycol)	−30 ... +60
Mineral greases	−30 ... +100
Pressure p in MPa	25
Running speed v in m/s	0,5

Surface quality

Surface roughness	R_a	R_{max}
Sliding surface	0,05 ... 0,3 µm	≤2,5 µm
Groove base	≤1,6 µm	≤6,3 µm
Groove flanks	≤3,0 µm	≤15,0 µm

Percentage contact area M_r >50% to max. 90% at cutting depth c = Rz/2 and reference line C ref = 0%.

DESIGN NOTES

Please observe our general design notes.

Gap dimension

The decisive factor for the function of the seal is the largest gap dimension occurring during operation on the non-pressurised side of the seal. In the case of larger gap dimensions than specified in the table full-surface back-up ring of plastic should be used behind the seal.

Profile	Max. permissible gap dimension	
	16 MPa	25 MPa
≤6	0,2	0,1
>6 ... 10	0,2	0,1
>10 ... 15	0,2	0,1

Tolerance recommendation and dimension d2

The admissible gap width, tolerances, guide play and deflection of the guide under load are to be taken into account when designing D2.

Nominal Ø d	d	D
≤80	f8	H11
>80 ... 120	f8	H11
>120 ... 340	f7	H11

Fit example for metal guides

Nominal Ø d	d	D
≤80	H9/f8	H11
>80 ... 120	H8/f8	H11
>120 ... 340	H8/f7	H11

FITTING & INSTALLATION

Careful fitting is a prerequisite for the correct function of the seal.

MERKEL COMPACT SEAL TFMI

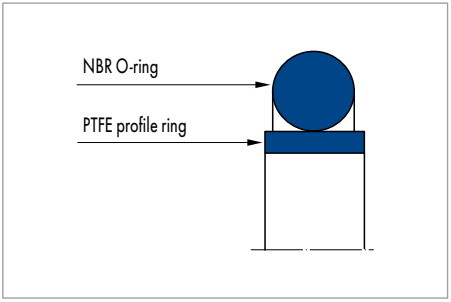

Merkel Compact Seal TFMI

PRODUCT DESCRIPTION

Two-piece Merkel compact seal consisting of profile ring and O-ring as a pre-load component.

PRODUCT ADVANTAGES

Rod seal for lower pressure range with properties of
- Low friction
- Low housing height.

MATERIAL

Profile ring

Material	Code
PTFE bronze compound	PTFE 177023

O-ring

Material	Code
Nitrile rubber NBR	70 Shore A

OPERATING CONDITIONS

Material	PTFE 177023/NBR
	Temperature range in °C
Hydraulic oils HL, HLP	−30 ... +100
HFA fluids	–
HFB fluids	–
HFC fluids	–
HFD fluids	–
Water	–
HETG (rapeseed oil)	−30 ... +80
HEES (synthetic ester)	–
HEPG (glycol)	−30 ... +60
Mineral greases	−30 ... +100
Pressure p in MPa	16
Running speed v in m/s	2

Surface quality

Surface roughness	R_a	R_{max}
Sliding surface	0,05 ... 0,3 µm	≤2,5 µm
Groove base	≤2,0 µm	≤6,3 µm
Groove flanks	≤3,0 µm	≤15,0 µm

Percentage contact area M_r >50% to max. 90% at cutting depth c = Rz/2 and reference line C ref = 0%.

DESIGN NOTES

Please observe our general design notes.

Gap dimension

The decisive factor for the function of the seal is the largest gap dimension occurring during operation on the non-pressurised side of the seal. We recommend a metal guide H8/f7.

FITTING & INSTALLATION

Careful fitting is a prerequisite for the correct function of the seal.

MERKEL CHEVRON SEAL SET ES, ESV

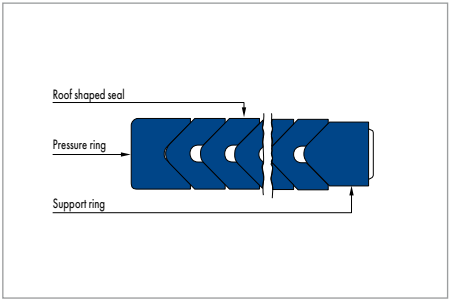

Merkel Chevron Seal Set ES, ESV

PRODUCT DESCRIPTION

Multi-component Merkel seal set for sealing piston rods, consisting of a pressure ring, at least 3 seals and a back-up ring. The Merkel Chevron Seal Sets are available in 3 different designs.
Type A has 3 to 5 fabric roof-shaped seals and can be installed in adjustable or non-adjustable sealing areas.
Type B has 3 to 5 fabric roof-shaped seals, one rubber-sprung back-up ring and is installed in non-adjustable sealing areas. Constant axial pre-load.
Type C has 2 to 4 fabric roof-shaped seals, one rubber seal and can be installed in adjustable and non-adjustable sealing areas. For an enhanced sealing effect.
Type A and Type B can be supplied in open form.
Type C is always delivered in endless form.

PRODUCT ADVANTAGES

Seal set for robust operating conditions, mainly for provision of spare parts to old plant

- Proven under extreme conditions
- Long service life
- Can be optimally adjusted to the related application
- Functions over a certain time period even with poorer surfaces
- For application and design-related reasons fluctuations in the leakage behaviour and friction behaviour are to be expected.

APPLICATION

Injection moulding machines, presses, marine hydraulics, scrap cutters, iron and steel industry, special cylinders, steel hydraulics, engineering.

MATERIAL

Pressure ring

Material	Code
Cotton fabric/NBR	BI-NBR B259
Cotton fabric/FKM	BI-FKM

Rubber fabric roof-shaped seal

Material	Code
Cotton fabric/NBR	BI-NBR
Cotton fabric/FKM	BI-FKM

Rubber seal

Material	Code	
NBR	85 NBR	85 Shore A
FKM	85 FKM (ESV)	85 Shore A

Back-up ring

Material	Code
Cotton fabric/NBR	BI-NBR
Cotton fabric/FKM	BI-FKM
Polyacetal POM	POM

OPERATING CONDITIONS

Material	BI-NBR / 85 NBR	BI-FKM /85 FKM
	Temperature range in °C	
Hydraulic oils HL, HLP	−30 ... +100	−15 ... +140
HFA fluids	+5 ... +60	+5 ... +60
HFB fluids	+5 ... +60	+5 ... +60
HFC fluids	−30 ... +60	−15 ... +60
HFD fluids	–	−15 ... +140
Water	+5 ... +100	+5 ... +80
HETG (rapeseed oil)	−30 ... +80	−15 ... +80
HEES (synthetic ester)	−30 ... +80	−15 ... +100
HEPG (glycol)	−30 ... +60	−15 ... +80
Mineral greases	−30 ... +100	−15 ... +140
Pressure p in MPa	40	
Running speed v in m/s	0,5	

Surface quality

Surface roughness	R_a	R_{max}
Sliding surface	0,05 ... 0,3 µm	≤2,5 µm
Groove base	≤1,6 µm	≤6,3 µm
Groove flanks	≤3,0 µm	≤15,0 µm

Percentage contact area M_r >50% up to max. 90% at cutting depth c = Rz/2 and reference line C ref = 0%.

DESIGN NOTES

Please observe our general design notes.

Gap dimension

The largest gap dimension occurring on the non-pressurised side of the seal in operation is of vital importance for the function of the seal.

Nominal Ø d	d
≤80	H9/f8
>80 ... 120	H8/f8
>120 ... 500	H8/f7
> 500 ... 630	H8/f7
> 630 ... 800	H8/f7
> 800 ... 1000	H8/f7
>1000 ... 1250	H8/f7

Nominal Ø d	d
≤500	H11
>500	H10

HOUSING

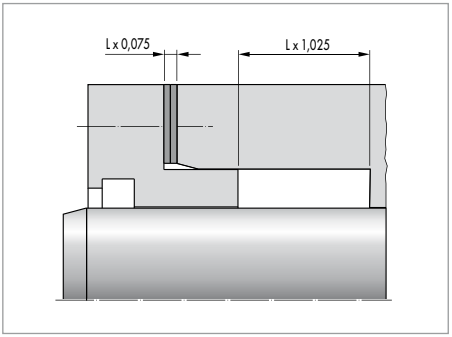

Adjustable housings have the advantage of an optimal adjustment option for the sealing effect with minimal idling friction. After a lengthy period of running and incipient wear on the seal tightening the gland can extend the durability and significantly delay a system standstill. For adjustable housings an extension of 2,5% and an adjustability of 7,5% of dimension L is recommended. Non-adjustable housings have the advantage of more cost-effective manufacture, because washers are not required. Seal set type B is particularly recommended for these housings. The rubber-sprung back-up rings handle the function of initial compression and continuous re-adjustment during operation. Maintenance of the seal contact area is not required. This takes optimum advantage of the durability of the seal set.

FITTING & INSTALLATION

Careful fitting is a prerequisite for the correct function of the seal. Before installation all individual parts of the seal set must be greased. Mineral-oil-based greases can be used so long as they have a good seal-compatibility. The rod must be in the cylinder's installation space before installation. Merkel Chevron Seal Sets can also be built-in in an open form. This has the advantage that in the event of a repair and replacement of the seal set, e.g. in a large system, it does not require a large amount of work for installation. The sealing rings are installed on the plunger or the piston rod and pushed into the housing one by one.

CHEVRON SEAL SET MADE OF PTFE

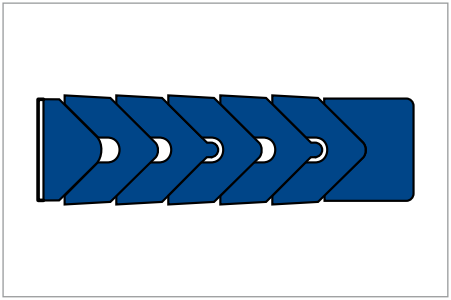

Chevron Seal Set made of PTFE

PRODUCT DESCRIPTION

- Proven sealing systems for piston rods, plungers, spindles and slowly rotating shafts
- Sets consisting of pressure ring, chevron seals, back-up ring
- The number of chevron seals in a sealing set depends on the pressure and temperature in the operating range.

PRODUCT ADVANTAGES

- Universal chemical resistance
- High temperature resistance
- Very high resistance to pressure
- Good sliding and lubricating properties
- High wear resistance and dimensional stability
- Very high protection against extrusion.

APPLICATION

- Chemistry
- Pharmaceuticals
- Measuring and control systems
- General mechanical engineering
- Foodstuffs industry
- Iron and steel industry

e.g. regulation and shut-off valves, plunger pumps, metering systems, agitators, hydraulic cylinders, rotary joints.

MATERIALS

- PTFE/PTFE compound
- PTFE impregnated plastic fabric.

OPERATING CONDITIONS

Material	PTFE/PTFE compound	PTFE impregnated fabric
Pressure	30 MPa	70 MPa
Linear velocity – Continuous operation – Intermittent operation	 0,5 m/s 1,2 m/s	 0,5 m/s 0,8 m/s
Temperature	–200 ... +260 °C	–200 ... +260 °C

All operating parameters given are maximum values. Simultaneously occurring maximum loads may require design measures in some circumstances. Please consult our technical advisory service.

DESIGN NOTES

The dimensions of the housings are given in the lists of dimensions. The housing and the rod or shaft should have lead-in chamfers so that the sealing edges of the seals are not damaged during fitting. The fits and surface qualities of the metal parts as well as the guide affect the function and service life of the seal sets.

Tolerances

Plunger Ø d	Recommended fit	Housing Ø D
... 80	H9/f8	H8
>80 ... 120	H8/f8	
>120 ... 200	H8/f7	

Surface quality

Surface roughness	ISO roughness parameter	Mean roughness R_a
Contact area	4	0,2
Housing outside Ø	6*	0,8
Housing front faces	8	3,2

* Minimum requirement

FITTING NOTES

Chevron seal sets made of PTFE

PTFE chevron seals have relatively high thermal expansion. The seal set must therefore be elastically retained under load by a spring component. The spring force depends on the type and dimensions of the seal profile. For the profile 9409 a pre-load of 0,2 N/mm^2 is necessary. For the profiles 9403 and 9406 the pre-load from the spring must be 0,8 N/mm^2 , also for smaller dimensions beyond this figure. The information on the spring forces apply for standard applications.

PTFE impregnated fabric Chevron Seal Set

These sets are intended for adjustable housings. As a rule the seal sets are installed without additional spring components.

RECOMMENDED DIMENSIONS OF THE CHEVRON SEAL SETS MADE OF PURE PTFE AND PTFE COMPOUND

Profile 9409 (single seal)	Profile 9403 (single seal)
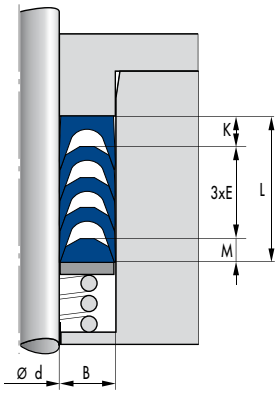	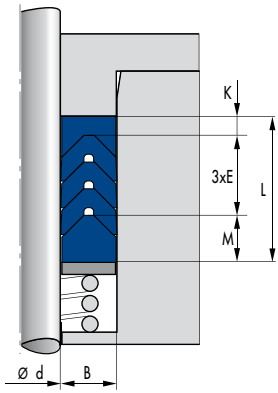

Article list				0971				0987	0986	0985
B	E	K	M_{min}	L*	E	K	M_{min}	L*		
				3				3	4	5
4	2,7	2,7	4	15	2,4	2,4	3,5	14	16	18
5	3,4	3,4	4,6	19	3	2,4	4	16	19	22
6	4,1	4,1	5	22	3,5	3,5	4,4	19	22	26
7,5	5,1	5,1	5,6	26	4	4	5,1	22	26	30
10	6,8	6,8	7	35	5	5	6,1	27	32	37
12,5	8,5	8,5	8,2	43	6	6	7,2	32	38	44
15	10,2	10,2	9,7	51	7,5	7,5	8,1	39	46	54

* for number of seals.

Profile 9406 (single seal)

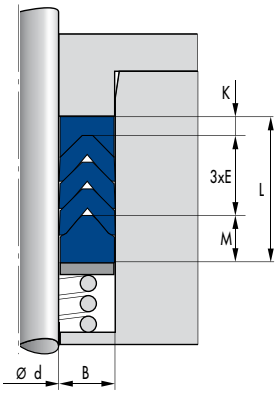

			0980	0979	0978	0977
E	K	M_{min}	L*			
			2	3	4	5
2,6	2,4	3,5	12	14	17	19
3,3	3	4	14	17	21	24
3,9	3,5	4,4	16	20	24	28
4,9	4	5,1	19	24	29	34
6,5	5	6,1	25	31	38	44
8,1	6	7,2	30	38	46	54
9,8	7,5	8,1	36	45	55	65

* for number of seals.

PACKING RING TFW MADE OF PTFE

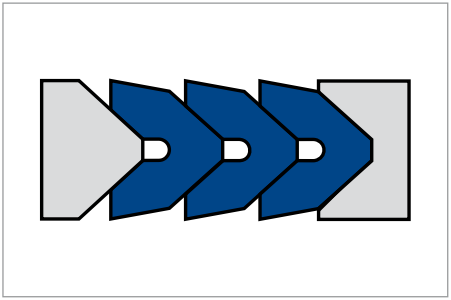

Packing Ring TFW made of PTFE

PRODUCT DESCRIPTION

V-shape sealing ring made of PTFE for making up pakkings, comprising:

- 1 saddle ring TFS
- 3 to 5 angled rings TFW
- 1 mating ring TFG.

Note:
Only TFW rings are available from stock. Complete packings are only available on request.

PRODUCT ADVANTAGES

Packing rings TFW feature very good chemical and thermal resistance, low friction and favourable breakaway forces even after long periods of down-time.

APPLICATION

Packing rings TFW are suitable for axially operated valve spindles, rods and plungers, as well as slowly turning shafts.

MATERIAL

Saddle ring	Angled ring	Mating ring
PTFE on request Metal (customer solution)	PTFE 15/F52902 (graphite-filled PTFE))	PTFE on request Metal (customer solution)

OPERATING CONDITIONS

Pressure	Temperature
31,5 MPa	−200 ... +220 °C

Running speed	on axial movement	on rotary movement
Continuous operation	approx. 0,5 m/s	approx. 0,2 m/s
Intermittent operation	approx. 1,5 m/s	approx. 0,4 m/s

FITTING & INSTALLATION

With fluctuating operating temperatures or when sealing a rotating shaft, the packing is to be pre-loaded with 1,5 to 2 N/mm² on the pressure side using a spring. If the spring must be installed on the non-pressurised side then its pre-load is to be matched to the maximum pressure that occurs. If metal saddle and mating rings are manufactured by the customer, the dimensions are to be taken from the table. The number of PTFE angled rings depends on the pressure of the medium.

We recommend:

p ≤3 MPa	p >3 ... 10 MPa	p >10 MPa
3 TFW	4 TFW	5 TFW

LIST OF DIMENSIONS

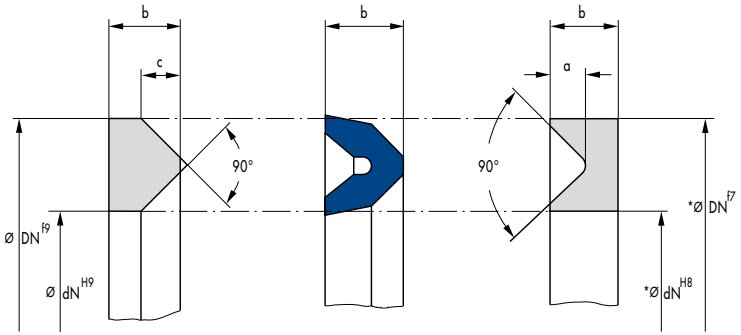

* = tolerances only apply for metal design

Ø Difference DN–dN	Mating ring TFG[1]		Angled ring TFW	Saddle ring TFS[1]		Packing height	
	b	a	b	b	c	b_1[2]	Δh[3]
8	4	1,4	3,8	4	1,7	15,3	2,9
10	4,5	1,8	4,8	4,5	2,1	17,8	3,6
12	5	2,1	5,8	5	2,5	20,3	4,2
15	6	2,6	7	6	3,1	23,5	4,7
20	7,5	3,4	9,3	7,5	4,3	29,6	6
25	9	4,5	11,2	9	5,4	33,7	6,8
30	10,5	5,5	13	10,5	6,3	38,4	7,7

1) TFS/TFG available on request

2) Height with 3 TFW

3) Height increase for each additional angled ring TFW

MERKEL V-PACKINGS V 1000

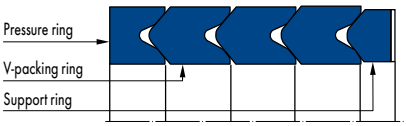

Merkel V-Packings V 1000

PRODUCT DESCRIPTION

Merkel V-packings are used for sealing piston rods, plungers and in exceptional cases of pistons. With their robust design they are very suitable for use in highly demanding, heavy and horizontal compressors, particularly if the plungers are subject to large side forces. V-packings can even be used if piston rods or plungers cannot be correctly used because of wear. V-packing in connection with fabric pressure and back-up rings are used primarily in heavy-duty hydraulics because they can easily be tightened at any time and their robust design. V-packing rings are supplied open for nominal diameter up to an inside diameter of 400 mm. For larger diameters the rings are overdimensioned in length, and they must be precisely fitted during fitting into the compression packing. If required endless rings can also be supplied. If no information on the version, the fluid or temperature is given, B/B (see Operating parameters range table) is delivered as the standard version.

APPLICATION

Heavy machinery manufacture, iron and steel technology, scrap shears, manipulators.

MATERIAL

Pressure ring

Material	Code
Natural rubber	BI-NR B5A151 (B/A)
Natural rubber	BI-NR B5B210 (B/B)

OPERATING CONDITIONS

Material	BI-NBR B6B210/ BI-NBR B6B210 (B/B)
	Temperature range in °C
Hydraulic oils HL, HLP	−30 ... +100
HFA fluids	+5 ... +60
HFB fluids	+5 ... +60
HFC fluids	−30 ... +60
HFD fluids	–
Water	+5 ... +100
HETG (rapeseed oil)	−30 ... +80
HEES (synthetic ester)	−30 ... +80
HEPG (glycol)	−30 ... +60
Mineral greases	−30 ... +100

Surface quality

Surface roughness	R_a	R_{max}
Contact area	0,4 µm	≤4 µm
Outer housing Ø	≤1,8 µm	≤10 µm
Housing end face	≤3,0 µm	≤16 µm

DESIGN NOTES

Please observe our general design notes.

Determination of the housing

The dimensions of the V-packings 1000 are listed below. Sufficient dimensioning is very important for the operating safety and service life of the seal, because if the section widths are too small may result in difficulty in operation and lower service life. We recommend the profile widths listed in the table in association with the nominal diameter.

Nominal Ø d	Profile width B
... 25	7,5
>25 ... 80	10,0
>80 ... 120	12,5
>120 ... 250	15,0
>250 ... 500	20,0
>500 ... 1000	25,0
>1000	30,0

V-packings are supplied with a plus tolerance in the height. The housings must therefore be adjustable in the axial direction. The number and height of the washers under the gland depends on the section width and therefore also the height of the set. For the recommended minimum tightening dimension z and the recommended lead-in chamfers see the table.

Profile width B	7,5	10	12,5	15	20	25	30
≤500	4	8,0	10,0	12	15,0	20	30
>500	5	6,5	7,5	10	12,5	15	15

Fits

Diameter	Clearance fit	Housing diameter D
... 80	H9/f8	H11
>80 ... 120	H8/f8	
>120 ... 500	H8/e8	
>500 ... 630	450 µm	H10
>630 ... 800	500 µm	
>800 ... 1000	550 µm	
>1000 ... 1250	700 µm	
>1250 ... 1600	750 µm	
>1600 ... 1800	850 µm	
>1800	950 µm	

To achieve the desired sealing effect with open or cut seal sets, the circumference length must be greater than the length calculated from the nominal diameter. The specific added length enables the required pressing at the joint sections.

V-packings with a nominal diameter of up to 400 mm

These packings have correct assembly dimensions. They can be installed without any further advance preparation.

V-packings with a nominal diameter of more than 400 mm

If the packings are to be stored for very long periods and are subject to a wide variety of environmental influences, changes in the circumference length may occur. Therefore, these sizes are always supplied with extra overlength. The packings over 400 mm in nominal diameter must therefore be trimmed to the required size immediately before fitting: nominal length of circumference plus extra length "e" in accordance with the table. This table is applicable for the seals and pressure rings. The support rings are cut blunt so they have a gap of 1 to 5 mm when centred in the seal. Any plastic back-up rings included in the seal set are trimmed diagonally to fit exactly.

FITTING & INSTALLATION

Careful fitting is a prerequisite for the correct function of the seal. On fitting every ring is individually inserted into the sealing area at multiple points – with the joint sections first. In this regard the joint sections take the "position after installation" shown in the illustration and should be positioned offset 120° from ring to ring, as shown in the illustration. Before fitting the seals must be greased. The use of neutral, compatible greases is beneficial. This grease substantially reduces the friction and makes the assembly easier. When tightening the gland all rings of the seal set are brought to the final position.

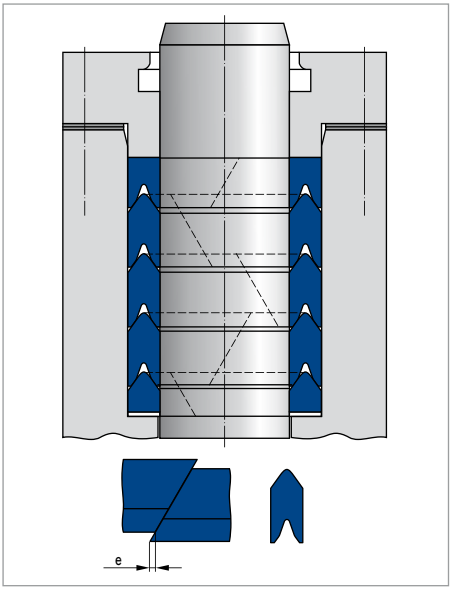

Ø d	Added length
200 ... 250	7
>250 ... 500	9
>500 ... 750	12
>750 ... 1000	15
>1000 ... 1500	20
>1500 ... 2000	25

SPECIAL DESIGNS WITH ANTI-EXTRUSION RINGS (BACK-UP RINGS)

For new designs

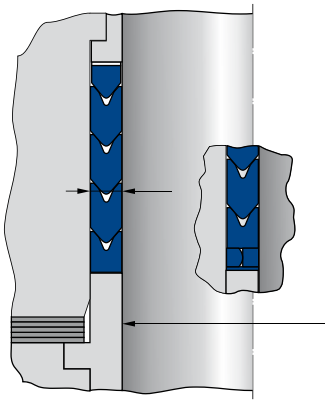

Open
B 25 Ø 400 ... 3000;
other dimensions on enquiry.
B 30 Ø 650 ... 3000;
other dimensions on enquiry.

For repairs (greater play for fitting)

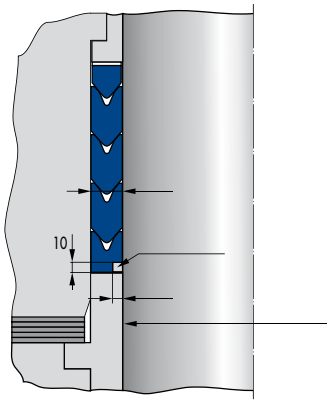

Open
Ø 650 ... 3000;
over Ø 3000 on enquiry.

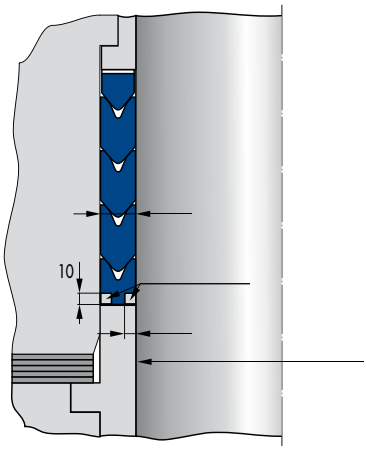

Open
B 27,5 Ø 720 ... 3000;
over Ø 3000 on enquiry.
B 30 Ø 650 ... 3000;
over Ø 3000 on enquiry.

MERKEL HAT SEAL H WITH SPRING

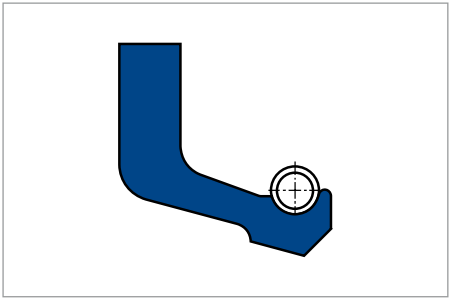

Merkel Hat Seal H with Spring

PRODUCT DESCRIPTION

Lip seal, spring-loaded in some cases. Clamping flange for fixing in the housing.

PRODUCT ADVANTAGES

Single-acting rod seal for less important applications and spare parts requirements. We recommend more modern series for new designs.

APPLICATION

Standard cylinders.

MATERIAL

Material	Code	Hardness
Nitrile rubber NBR	88 NBR 101	88 Shore A

OPERATING CONDITIONS

Material	88 NBR 101
	Temperature range in °C
Hydraulic oils HL, HLP	−30 ... +100
HFA fluids	+5 ... +60
HFB fluids	+5 ... +60
HFC fluids	−30 ... +60
HFD fluids	–
Water	+5 ... +90
HETG (rapeseed oil)	−30 ... +80
HEES (synthetic ester)	–
HEPG (glycol)	−30 ... +60
Mineral greases	−30 ... +100
Pressure p in MPa	1
Running speed v in m/s	0,5

Surface quality

Surface roughness	R_a	R_{max}
Sliding surface	0,05 ... 0,3 µm	≤2,5 µm
Groove base	≤1,6 µm	≤6,3 µm
Groove flanks	≤3,0 µm	≤15,0 µm

Percentage contact area Mr >50% to max. 90% at cutting depth c = RZ/2 and reference line C ref = 0%

DESIGN NOTES

Please observe our general design notes.

Gap dimension

The most important factor for the function of the seal is the largest gap dimension encountered during operation on the non-pressurised side of the seal. x_2 ≤0,3.

Tolerance recommendation

The admissible gap width, tolerances, guide play and compressive deflection of the guide under load must be considered for the design of d2.

Nominal Ø D	d	D
≤420	f8	H10

FITTING & INSTALLATION

Careful fitting is a prerequisite for the correct function of the seal.

MERKEL HAT SEAL H WITHOUT SPRING

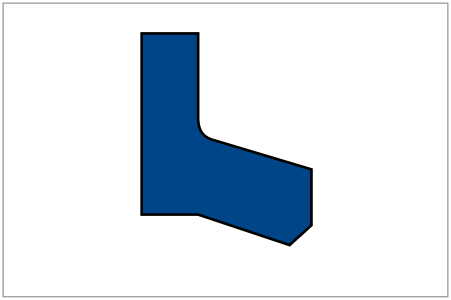

Merkel Hat Seal H without Spring

PRODUCT ADVANTAGES

Single-acting rod seal for less important applications and spare parts requirements. We recommend more modern series for new designs.

APPLICATION

Standard cylinders.

MATERIAL

Material	Code	Hardness
Nitrile rubber NBR	88 NBR 101	88 Shore A

PRODUCT DESCRIPTION

Lip seal. Clamping flange for fixing in the housing.

OPERATING CONDITIONS

Material	88 NBR 101
	Temperature range in °C
Hydraulic oils HL, HLP	−30 ... +100
HFA fluids	+5 ... +60
HFB fluids	+5 ... +60
HFC fluids	−30 ... +60
HFD fluids	–
Water	+5 ... +90
HETG (rapeseed oil)	−30 ... +80
HEES (synthetic ester)	–
HEPG (glycol)	−30 ... +60
Mineral greases	−30 ... +100
Pressure p in MPa	1
Running speed v in m/s	0,5

Surface quality

Surface roughness	R_a	R_{max}
Sliding surface	0,05 ... 0,3 µm	≤2,5 µm
Groove base	≤1,6 µm	≤6,3 µm
Groove flanks	≤3,0 µm	≤15,0 µm

Percentage contact area Mr >50% up to max. 90% at cutting depth c = RZ/2 and reference line C ref = 0%

DESIGN NOTES

Please observe our general design notes.

Gap dimension

The most important characteristic for the function of the seal is the largest gap dimension encountered during operation on the non-pressurised side of the seal. x_2 ≤0,3.

Tolerance recommendation

The admissible gap width, tolerances, guide play and compressive deflection of the guide under load must be considered for the design of d2.

Nominal Ø D	d	D
≤420	f8	H10

FITTING & INSTALLATION

Careful fitting is a prerequisite for the correct function of the seal.

FORSEAL FOI MADE OF PTFE

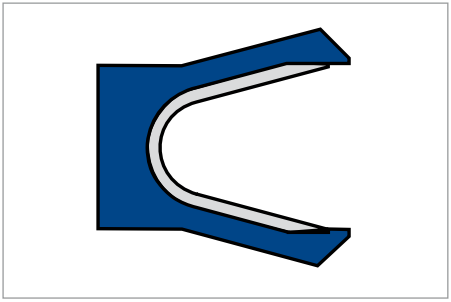

Forseal FOI made of PTFE

PRODUCT ADVANTAGES

Axially moving rod seal, interchangeable for O-ring housings (ARP568, MIL-P-5514)

- Extremely media and temperature resistant
- Good dry running properties
- Low static and dynamic friction values.

APPLICATION

Hot water valves, accumulators, hydraulic and pneumatic cylinders as well as applications in food processing, medical and chemical technology.

PRODUCT DESCRIPTION

Single acting, U-ring type PTFE seal with metal tension spring.

MATERIAL

Material	Code	Tension spring
Carbon-filled PTFE	PTFE 10/F56110	Standard stainless steel (part no. 1.4310)

OPERATING CONDITIONS

Material	PTFE 10/F56110 + 1.4310
	Temperature range in °C
Hydraulic fluids, oil, water, steam, air, solvents, pharmaceutical goods, foodstuffs or all media that do not attack PTFE and stainless steel	–200 ... +260
Pressure p in MPa	30
Running speed v in m/s	15

Material	PTFE 10/F56110 +spring Hastelloy C276 (Not available ex-works)
	Temperature range in °C
Aggressive acids and alkalis	−200 ... +260
Pressure p in MPa	30
Running speed v in m/s	15

Rotary and pivoting motions possible. No rotation.

Surface quality

Sealing surfaces, dynamic/static: → Fig.
Lead-in chamfers: R_a <1,6 µm
Sides of groove: R_a <2,5 µm

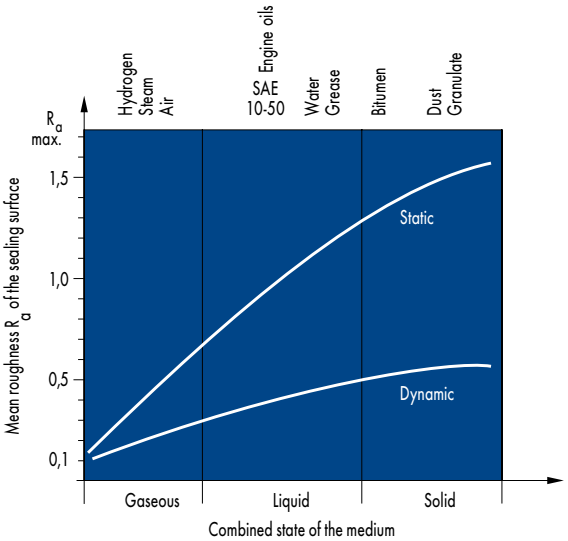

Surface recommendation for sealing surfaces

DESIGN NOTES

Beside the default dimensions, all special dimensions considering the U-ring profiles are available on request without surcharge for the tool.
Dimensions available from Ø 5 mm (rod) to approx. 2000 mm. In general, installation is only possible in split, axially accessible grooves. Installation in half-open grooves possible in exceptional cases.

PRE-SELECTION HYDRAULICS – PISTON SEALS

Temperature figures refer to mineral oils. Due to the large choice of media with different and varying additives, which is not always easily comprehensible, the above operating limits are only recommended values. We recommend testing resistance in the specific case.
Individual instances of the operating limits stated may be exceeded taking into account the related operating conditions. With a long duty cycle, stop-start operation or other difficult operating conditions it is recommended that these values are not simultaneously exploited to the full.

Seal		Standard		
Type	**Material**	**DIN/ISO**	**Examples of use**	
Omegat OMK-MR 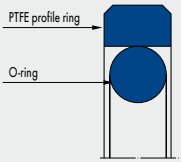	PTFE bronze NBR PTFE bronze FKM PTFE glass NBR	7425/1	Suitable for rapid pressure change, low friction, free of stick-slip, high temperature resistance.	
Omegat OMK-E 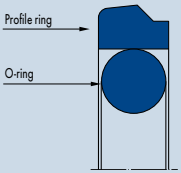	PTFE bronze NBR PTFE bronze FKM PTFE glass NBR	based on 7425/1	Very high pressure resistance and hardness, low friction, free of stick-slip, high temperature resistance.	
Omegat OMK-S 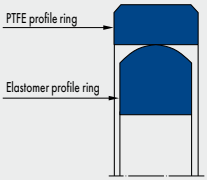	PTFE glass NBR		Suitable for rapid pressure change and heavy duty hydraulic applications, low friction, free of stick-slip, high temperature resistance.	

● = very good; ◑ = good; ○ = possibile or satisfactory; ⊗ = not suitable

	Function					Operating Limits		
	single-acting	double-acting	Individual seal	Primary seal	Secondary seal	Pressure (MPa)	Speed (m/s)	Temperature (°C)
	⊗	●				40	5,0	−30 ... +100
	●	⊗				40	5,0	−30 ... +100
	⊗	●				40	5,0	−30 ... +100

Seal		Standard		
Type	**Material**	**DIN/ISO**	**Examples of use**	
Merkel Omegat OMK-ES 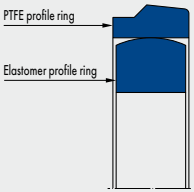	PTFE glass NBR		Suitable for heavy duty hydraulic applications, low friction, free of stick-slip, high temperature resistance.	
T 18 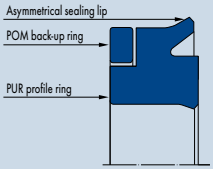	95 AU V142/POM	5597	Single-acting, for high pressures and large gap widths.	
TM 21 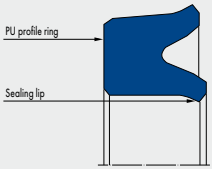	95 AU V142		Good static and dynamic tightness, specifically for special sizes.	
TMP 21 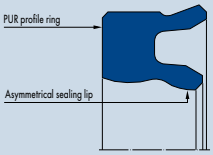	93 AU V167		Specifically for pneumatic applications.	

● = very good; ◑ = good; ○ = possibile or satisfactory; ⊗ = not suitable

	Function					Operating Limits		
	single-acting	double-acting	Individual seal	Primary seal	Secondary seal	Pressure (MPa)	Speed (m/s)	Temperature (°C)
	●	⊗				40	5,0	−30 ... +100
	●	⊗				50	0,5	−30 ... +110
	●	⊗				40	0,5	−30 ... +110
	●	⊗				2	1,5	

Seal		Standard		
Type	**Material**	**DIN/ISO**	**Examples of use**	
NA 300 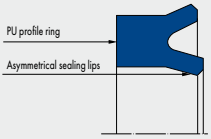	94 AU 925	5597	Single-acting, optimal price/ performance ratio.	
Simko 300 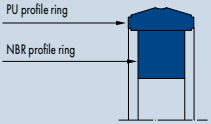	98 AU 928/NBR	based on 7425/1	Double-acting, optimal price/ performance ratio.	

● = very good; ◑ = good; ○ = possibile or satisfactory; ⊗ = not suitable

	Function					Operating Limits		
	single-acting	double-acting	Individual seal	Primary seal	Secondary seal	Pressure (MPa)	Speed (m/s)	Temperature (°C)
	●	⊗				40	0,5	−30 ... +110
	⊗	●				40	0,5	−30 ... +110

MERKEL U-RING NA 150

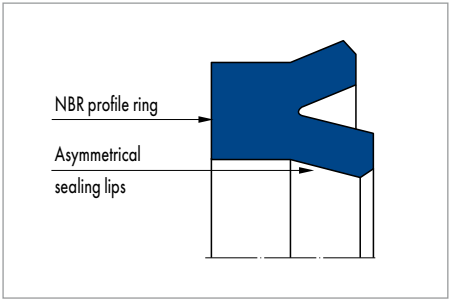

Merkel U-Ring NA 150

PRODUCT DESCRIPTION

Merkel U-ring with asymmetrical profile of the sealing lips.

PRODUCT ADVANTAGES

Single-acting piston seal, preferably for spare parts requirement.

APPLICATION

Earth moving equipment, industrial vehicles, agricultural machinery.
We recommend more modern series for new designs.

MATERIAL

Profile ring

Material	Code	Hardness
Nitrile rubber NBR	80 NBR 878	80 Shore A

OPERATING CONDITIONS

Material	80 NBR 878
	Temperature range in °C
Hydraulic oils HL, HLP	−30 ... +100
HFA fluids	+5 ... +60
HFB fluids	+5 ... +60
HFC fluids	−30 ... +60
HFD fluids	–
Water	+5 ... +90
HETG (rapeseed oil)	−30 ... +80
HEES (synthetic esters)	–
HEPG (glycol)	−30 ... +60
Mineral greases	−30 ... +100
Pressure p in MPa	10
Running speed v in m/s	0,5

Surface quality

Surface roughness	R_a	R_{max}
Sliding surface	0,05 ... 0,3 µm	≤2,5 µm
Groove base	≤1,6 µm	≤6,3 µm
Groove flanks	≤3,0 µm	≤15,0 µm

Percentage contact area M_r >50% to max. 90% at cutting depth c = Rz/2 and reference line C ref = 0%.

DESIGN NOTES

Please observe our general design notes.

Gap dimension

The largest gap dimension occurring on the non-pressurised side of the seal in operation is of vital importance for the function of the seal.

Profile	Max. permissible gap dimension			
	2,5 MPa	5 MPa	7,5 MPa	10 MPa
≤5	0,45	0,30	0,25	0,20
>5	0,50	0,35	0,30	0,25

Tolerance recommendation and dimension d2

The admissible gap width, tolerances, guide play and deflection of the guide under load are to be taken into account when designing d2.

Nominal Ø D	D	d
≤200	H11	h11

FITTING & INSTALLATION

Careful fitting is a prerequisite for the correct function of the seal.

MERKEL U-RING NA 250

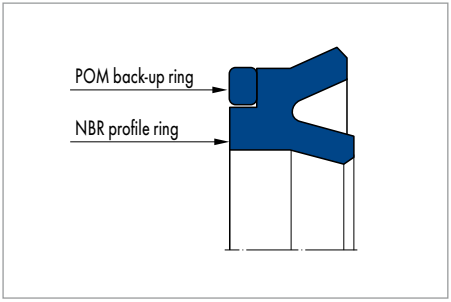

Merkel U-Ring NA 250

PRODUCT DESCRIPTION

Merkel U-ring with asymmetrical profile of the sealing lips and back-up ring as a gap sealing component.

PRODUCT ADVANTAGES

Single-acting piston seal for medium load, preferably for spare parts requirement.

APPLICATION

Standard cylinders, earth moving equipment, forestry equipment, excavators.
We recommend more modern series for new designs.

MATERIAL

Sealing component

Material	Code	Hardness
Nitrile rubber NBR	80 NBR 878	80 Shore A

Back-up ring

Material	Code
Polyacetal	POM 992020

OPERATING CONDITIONS

Material	80 NBR 878/POM
	Temperature range in °C
Hydraulic oils HL, HLP	−30 ... +100
HFA fluids	+5 ... +60
HFB fluids	+5 ... +60
HFC fluids	−30 ... +60
HFD fluids	–
Water	+5 ... +90
HETG (rapeseed oil)	−30 ... +80
HEES (synthetic esters)	–
HEPG (glycol)	−30 ... +60
Mineral greases	−30 ... +100
Pressure p in MPa	25
Running speed v in m/s	0,5

Surface quality

Surface roughness	R_a	R_{max}
Sliding surface	0,05 ... 0,3 µm	≤2,5 µm
Groove base	≤1,6 µm	≤6,3 µm
Groove flanks	≤3,0 µm	≤15,0 µm

Percentage contact area M_r >50% to max. 90% at cutting depth c = Rz/2 and reference line C ref = 0%.

DESIGN NOTES

Please observe our general design notes.

Gap dimension

The largest gap dimension occurring on the non-pressurised side of the seal in operation is of vital importance for the function of the seal.

Profile	Max. permissible gap dimension		
	7,5 MPa	10 MPa	25 MPa
≤80	0,95	0,80	0,60
>80	1,00	0,85	0,65

Tolerance recommendation and dimension d2

The admissible gap width, tolerances, guide play and deflection of the guide under load are to be taken into account when designing d2.

Nominal Ø D	D	d
≤180	H11	h11

FITTING & INSTALLATION

Careful fitting is a prerequisite for the correct function of the seal.

MERKEL U-RING NA 300

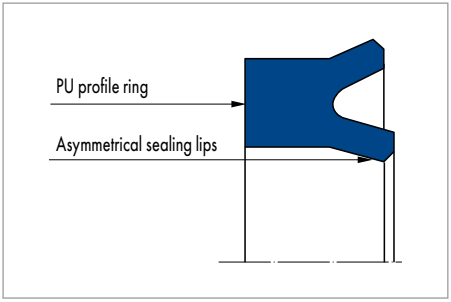

Merkel U-Ring NA 300

MATERIAL

Material	Code	Hardness
Polyurethane	94 AU 925	94 Shore A

OPERATING CONDITIONS

Material	94 AU 925
	Temperature range in °C
Hydraulic oils HL, HLP	−30 ... +110
HFA fluids	+5 ... +50
HFB fluids	+5 ... +50
HFC fluids	−30 ... +40
HFD fluids	–
Water	+5 ... +40
HETG (rapeseed oil)	−30 ... +60
HEES (synthetic esters)	−30 ... +80
HEPG (glycol)	−30 ... +40
Mineral greases	−30 ... +110
Pressure p in MPa	40
Running speed v in m/s	0,5

PRODUCT DESCRIPTION

Merkel U-ring with asymmetrical profile, outer lip set back and press fit at the inside diameter.

PRODUCT ADVANTAGES

Single-acting piston seal for standardised housings, amongst others, according to ISO 5597

- Very good static and dynamic tightness.

APPLICATION

Earth moving equipment, support cylinders, presses.

Surface quality

Surface roughness	R_a	R_{max}
Sliding surface	0,05 ... 0,3 µm	≤2,5 µm
Groove base	≤1,6 µm	≤6,3 µm
Groove flanks	≤3,0 µm	≤15,0 µm

Percentage contact area M_r >50% to max. 90% at cutting depth c = Rz/2 and reference line C ref = 0%.

DESIGN NOTES

Please observe our general design notes.

Gap dimension

The largest gap dimension occurring on the non-pressurised side of the seal in operation is of vital importance for the function of the seal.

Profile	Max. permissible gap dimension			
	16 MPa	26 MPa	32 MPa	40 MPa
4,0 ... 5,0	0,50	0,40	0,35	0,30
>5,0 ... 7,5	0,55	0,45	0,40	0,35
>7,5 ... 11,0	0,66	0,50	0,45	0,40

Tolerance recommendation and dimension d2

The admissible gap width, tolerances, guide play and deflection of the guide under load are to be taken into account when designing d2.

Nominal Ø D	D	d
≤400	H9	h11

FITTING & INSTALLATION

Careful fitting is a prerequisite for the correct function of the seal.

MERKEL U-RING NA 400

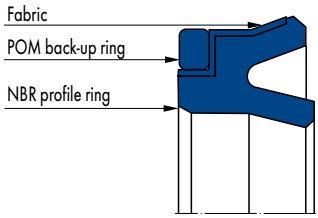

Merkel U-Ring NA 400

MATERIAL

Sealing component

Material	Code	Hardness
Nitrile rubber NBR	80 NBR 878	80 Shore A

Back-up ring

Material	Code
Polyacetal	POM 992020

PRODUCT DESCRIPTION

Merkel U-ring with asymmetrical profile of the sealing lips, fabric reinforcement on the dynamic sealing side and back-up ring as a gap sealing component.

PRODUCT ADVANTAGES

Single-acting piston seal for medium load, preferably for spare parts requirement.

APPLICATION

Earth moving equipment, industrial vehicles, presses, mobile hydraulics.
We recommend more modern series for new designs.

OPERATING CONDITIONS

Material	80 NBR 878/POM
	Temperature range in °C
Hydraulic oils HL, HLP	−30 ... +100
HFA fluids	+5 ... +60
HFB fluids	+5 ... +60
HFC fluids	−30 ... +60
HFD fluids	–
Water	+5 ... +90
HETG (rapeseed oil)	−30 ... +80
HEES (synthetic esters)	–
HEPG (glycol)	−30 ... +60
Mineral greases	−30 ... +100
Pressure p in MPa	40
Running speed v in m/s	0,5

Surface quality

Surface roughness	R_a	R_{max}
Sliding surface	0,05 ... 0,3 µm	≤2,5 µm
Groove base	≤1,6 µm	≤6,3 µm
Groove flanks	≤3,0 µm	≤15,0 µm

Percentage contact area M_r >50% to max. 90% at cutting depth c = Rz/2 and reference line C ref = 0%.

DESIGN NOTES

Please observe our general design notes.

Gap dimension

The largest gap dimension occurring on the non-pressurised side of the seal in operation is of vital importance for the function of the seal.

Profile	Max. permissible gap dimension			
	16 MPa	26 MPa	32 MPa	40 MPa
≤80	0,60	0,50	0,40	0,35
>80	0,65	0,55	0,45	0,40

Tolerance recommendation and dimension d2

The admissible gap width, tolerances, guide play and deflection of the guide under load are to be taken into account when designing d2.

Nominal Ø D	D	d
≤320	H11	h11

FITTING & INSTALLATION

Careful fitting is a prerequisite for the correct function of the seal.

MERKEL U-RING T 18

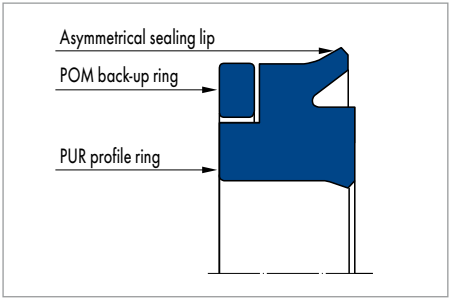

Merkel U-Ring T 18

PRODUCT DESCRIPTION

Merkel U-ring with integrated back-up ring, asymmetrical profile with pressure-relieving grooves, outer lip set back and press fit at the inside diameter.

PRODUCT ADVANTAGES

Single-acting piston seal also for standardised housings according to ISO 5597

- Very good static and dynamic tightness
- High extrusion resistance (back-up ring)
- "back-to-back" arrangement for pistons with pressure on both sides
- High reliability
- Relief grooves against dynamic drag pressure.

APPLICATION

Heavy duty earth moving equipment, scrap shears.

MATERIAL

Profile ring

Material	Code	Hardness
Polyurethane	95 AU V142	95 Shore A

Back-up ring

Material	Code
Polyacetal	POM PO202

Other materials are available on request.

OPERATING CONDITIONS

Material	95 AU V142/POM PO202
	Temperature range in °C
Hydraulic oils HL, HLP	−30 ... +110
HFA fluids	+5 ... +50
HFB fluids	+5 ... +50
HFC fluids	−30 ... +40
HFD fluids	–
Water	+5 ... +50
HETG (rapeseed oil)	−30 ... +60
HEES (synthetic esters)	−30 ... +80
HEPG (glycol)	−30 ... +50
Mineral greases	−30 ... +110
Pressure p in MPa	40
Running speed v in m/s	0,5

Surface quality

Surface roughness	R_a	R_{max}
Sliding surface	0,05 ... 0,3 µm	≤2,5 µm
Groove base	≤1,6 µm	≤6,3 µm
Groove flanks	≤3,0 µm	≤15,0 µm

Percentage contact area M_r >50% to max. 90% at cutting depth c = Rz/2 and reference line C ref = 0%.

DESIGN NOTES

Please observe our general design notes in.

Gap dimension d2

The largest gap dimension occurring on the non-pressurised side of the seal in operation is of vital importance for the function of the seal. Regard must be paid to the dimensions d1 and df in relation with the guide element used.

Profile		Max. permissible gap dimension		
	16 MPa	26 MPa	32 MPa	40 MPa
7,5	0,85	0,70	0,50	0,40
>7,5	1,05	0,90	0,85	0,80

Tolerance recommendation and dimension d2

The admissible gap width, tolerances, guide play and deflection of the guide under load are to be taken into account when designing d2.

Nominal Ø D	<40 MPa	
	D	d
≤400	H8	h11

FITTING & INSTALLATION

We recommend the use of a fitting tool for the fitting. Careful fitting is a prerequisite for the correct function of the seal.

MERKEL U-RING TM 21

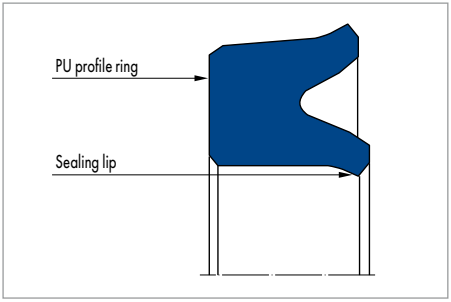

Merkel U-Ring TM 21

PRODUCT DESCRIPTION

Merkel U-ring with asymmetrical profile, inner lip set back and press fit at the outer diameter.

PRODUCT ADVANTAGES

Single-acting piston seal for hydraulic cylinders used in heavy machinery areas. The highly wear-resistant polyurethane material allows for use under high operating requirements

- Good media resistance
- Broad range of temperatures
- Very good static and dynamic tightness
- No mould tools required
- Large range of dimensions.

APPLICATION

Injection moulding machines, presses, heavy machinery manufacture, large cylinders.

MATERIAL

Ø range <500

Material	Code	Hardness
Polyurethan	95 AU V142	95 Shore A

Ø range >500

Material	Code	Hardness
Polyurethane	93 AU V167	93 Shore A

OPERATING CONDITIONS

Material	95 AU V142	93 AU V167
	Temperature range in °C	
Hydraulic oils HL, HLP	−30 ... +110	−25 ... +100
HFA fluids	+5 ... +50	+5 ... +60
HFB fluids	+5 ... +50	+5 ... +60
HFC fluids	−30 ... +40	−25 ... +40
HFD fluids	–	–
Water	+5 ... +50	+5 ... +60
HETG (rapeseed oil)	−30 ... +60	−25 ... +60
HEES (synthetic esters)	−30 ... +80	−25 ... +80
HEPG (glycol)	−30 ... +50	−25 ... +50
Mineral greases	−30 ... +110	−25 ... +100
Pressure p in MPa	40	
Running speed v in m/s	0,5	

Surface quality

Surface roughness	R_a	R_{max}
Sliding surface	0,05 ... 0,3 µm	≤2,5 µm
Groove base	≤1,6 µm	≤6,3 µm
Groove flanks	≤3,0 µm	≤15,0 µm

Percentage contact area M_r >50% to max. 90% at cutting depth c = Rz/2 and reference line C ref = 0%.

DESIGN NOTES

Please observe our general design notes.

Tolerance recommendation and dimension d2

The admissible gap width, tolerances, guide play and deflection of the guide under load are to be taken into account when designing D2.

Housing recommendations for new designs

Primary seal TM 20

D	d	L	C
>200 ... 630	D −30	25	9
>630 ... 800	D −40	32	11
>800 ... 2000	D −50	40	13

Recommended tolerances* for Merkel Guide Ring KB

D	16 MPa				26 MPa			
Ø D	S	D	d	X2	S	D	d	X2
... 250	15	H8	h11	0,65	15	H8	h11	0,55
... 500	15	H8	h11	0,65	15	H8	h11	0,55
... 560	15	H8	h11	0,65	15	H8	h11	0,55
... 450	20	H8	h11	0,67	20	H8	h11	0,57
... 600	20	H8	h11	0,67	20	H8	h11	0,57
... 750	20	H8	h11	0,67	20	H8	h11	0,57
... 1000	25	H8	h11	0,70	25	H8	h11	0,60
... 1400	25	H7	h11	0,70	25	H7	h11	0,60

D	32 MPa				40 MPa			
Ø D	S	D	d	X2	S	D	d	X2
... 250	15	H8	h11	0,45	15	H8	h11	0,40
... 500	15	H8	h11	0,45	15	H7	h11	0,40
... 560	15	H7	h11	0,45	15	H7	h11	0,40
... 450	20	H8	h11	0,47	20	H8	h11	0,42
... 600	20	H7	h11	0,47	20	H7	h11	0,42
... 750	20	H7	h11	0,47	20	H7	h11	0,42
... 1000	25	H7	h11	0,47	25	H7	h11	0,42
... 1400	25	H7	h11	0,47	25	H7	h11	0,42

* Profiles in accordance with "Housing recommendations for new designs".

FITTING & INSTALLATION

An axially accessible housing is necessary for articles with the "M" marking. For different housings, e. g. in old plants, please consult our advisory service.

MERKEL U-RING TMP 21

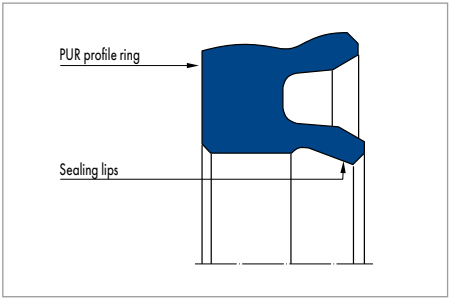

Merkel U-Ring TMP 21

PRODUCT ADVANTAGES

Piston seal that is primarily used in pneumatic cylinders in heavy-duty mechanical engineering. The U-rings are designed for application of pressure on one side.

- High tightness
- Large range of dimensions
- Suitable for dry air
- No mould tools required.

APPLICATION

Presses, large cylinders.

PRODUCT DESCRIPTION

Single-acting Merkel U-Ring TMP 21 made from polyurethane.

MATERIAL

D <500

Material	Code	Hardness	Colour
Polyurethane	93 AU V167	93 Shore A	red

D >500

Material	Code	Hardness	Colour
Polyurethane	93 AU V168	93 Shore A	red

OPERATING CONDITIONS

Material	93 AU V167/93 AU V168
	Temperature range in °C
Pneumatic	Air, dried or oiled
Pressure p in MPa	2*
Running speed v in m/s	1,5

* short version <1,2 MPa

Surface quality

Surface roughness	R_a	R_{max}
Sliding surface	0,05 ... 0,3 µm	≤2,5 µm
Groove base	≤1,6 µm	≤6,3 µm
Groove flanks	≤3,0 µm	≤15,0 µm

Percentage contact area M_r >50% to max 90% at cutting depth c = RZ/2 and reference line C ref = 0%. Abrasive surfaces, ridges, scratches and blow-holes are to be avoided.

DESIGN NOTES

Please observe our general design notes.

Housing recommendations for new designs

D	d	L	C
>70 ... 200	D – 20	16	8,5
>125 ... 345	D – 25	20	10,0
>180 ... 660	D – 30	24	11,5
>440 ... 840	D – 40	32	12,5
>850 ... 1250	D – 50	40	16,0
>1060 ... 2000	D – 60	48	18,0

FITTING & INSTALLATION

The piston seals can be pulled over the metallic face support shoulder by hand or by using an assessment aid (Gi-Hammer, lightly oiling or greasing seal). For different housings, e.g. in old plants, please consult our advisory service. For an optimum running-in and operation behaviour, the U-Rings should be lightly oiled or greased (initial lubrication) prior to use.

MERKEL COMPACT SEAL T 42

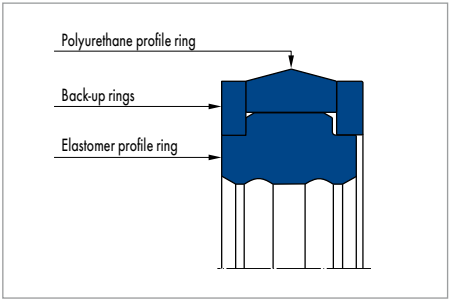

Merkel Compact Seal T 42

PRODUCT ADVANTAGES

Merkel Compact Seal T 42 for sealing pistons which can be pressurised on both sides in plungers, pushers and subsidiary cylinders in self-advancing support systems

- Very good protection against extrusion even with pressure peaks
- High resistance to abrasion
- High contact pressure due to rubber profile ring.

APPLICATION

Mining.

PRODUCT DESCRIPTION

Double-acting Merkel Compact Seal T 42 with back-up rings.

MATERIAL

Polyurethane profile ring	Back-up rings	Elastomer profile ring
93 AU V167	POM PO202	85 NBR B203 80 NBR B246

OPERATING CONDITIONS

Material	93 AU V167/NBR/POM PO202
	Temperature range in °C
HFA fluids	+5 ... +60
HFD fluids	+5 ... +60
Pressure p in MPa *	50
Running speed v in m/s	0,1

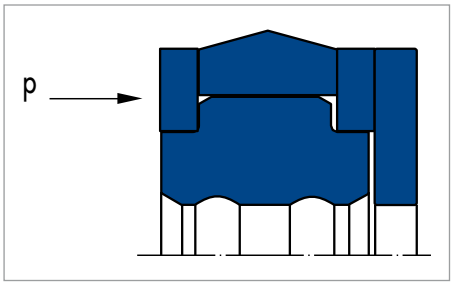

* If a full-surface back-up ring is used on the side not subjected to high pressure, the use of up to 150 MPa is possible. The height of the backup-ring should be 5 mm.

Surface quality

Surface roughness	R_a	R_{max}
Sliding surface	0,05 ... 0,3 µm	≤2,5 µm
Groove base	≤1,6 µm	≤6,3 µm
Groove flanks	≤3,0 µm	≤15,0 µm

Percentage contact area M_r >50% to max. 90% at cutting depth c = Rz/2 and reference line C ref = 0%.

DESIGN NOTES

Please observe our general design notes.

Tolerance recommendation

Ø d		16 MPa					26 MPa				
	Profile	D	d	D2	DF	X2	D	d	D2	DF	X2
... 230	>7,5 ... 10,0 (BR 5,0)	H8	h9	h9	h8	1,1	H8	h9	h9	h8	0,8
... 300	>10,0 ... 12,5 (BR 6,0)	H8	h9	h9	h8	1,6	H8	h9	h9	h8	1,2
... 380	>12,5 (BR 7,5 x 5,0)	H8	h9	h9	h8	1,6	H8	h9	h9	h8	1,2
... 140	≤7,5 (BR 4,0 x 3,0)	H8	h9	h9	h8	0,8	H8	h9	h9	h8	0,6
... 160	>7,5 ... 8,5 (BR 4,5)	H8	h9	h9	h8	0,8	H8	h9	h9	h8	0,6

Ø d		32 MPa					40 MPa				
	Profile	D	d	D2	DF	X2	D	d	D2	DF	X2
... 230	>7,5 ... 10,0 (BR 5,0)	H8	h9	h9	h8	0,6	H8	h9	h9	h8	0,5
... 300	>10,0 ... 12,5 (BR 6,0)	H8	h9	h9	h8	0,9	H8	h9	h9	h8	0,7
... 380	>12,5 (BR 7,5 x 5,0)	H8	h9	h9	h8	0,9	H8	h9	h9	h8	0,7
... 140	≤7,5 (BR 4,0 x 3,0)	H8	h9	h9	h8	0,5	H8	h9	h9	h8	0,4
... 160	>7,5 ... 8,5 (BR 4,5)	H8	h9	h9	h8	0,5	H8	h9	h9	h8	0,4

Gap dimension X2

The largest gap dimension occurring on the non-pressurised side of the seal in operation is of vital importance for the function of the seal.

Tolerance recommendation and dimension d2

When designing d_2 the admissible gap width, tolerances, guide play and deflection of the guide under load are to be taken into account.

Profile recommendation

D	S	L
<150	7,5	16,0
150 ... 200	10,0	20,0
>200 ... 400	12,5	20,0
>400	15,0	25,0

FITTING & INSTALLATION

Careful fitting is a prerequisite for the correct function of the seal.

MERKEL COMPACT SEAL T 44

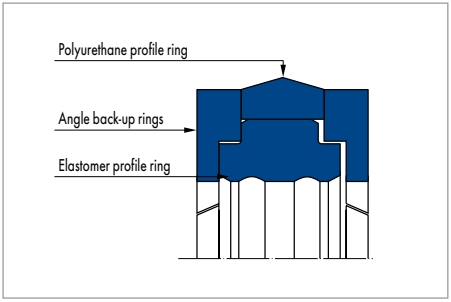

Merkel Compact Seal T 44

PRODUCT ADVANTAGES

Merkel Compact Seal T 44 for sealing pistons which can be pressurised on both sides in plungers, pushers and subsidiary cylinders in self-advancing support systems

- Very good protection against extrusion even with pressure peaks
- High resistance to abrasion
- High contact pressure due to rubber profile ring.

APPLICATION

Mining.

PRODUCT DESCRIPTION

Double-acting Merkel Compact Seal T 44 with semi-active angle back-up rings.

MATERIAL

Polyurethane profile ring	Back-up rings	Elastomer profile ring
93 AU V167	Polyacetal POM PO202	85 NBR B203

OPERATING CONDITIONS

Material	93 AU V167/NBR/POM PO202
	Temperature range in °C
HFA fluids	+5 ... +60
HFD fluids	+5 ... +60
Pressure p in MPa *	150
Running speed v in m/s	0,1

Surface quality

Surface roughness	R_a	R_{max}
Sliding surface	0,05 ... 0,3 µm	≤2,5 µm
Groove base	≤1,6 µm	≤6,3 µm
Groove flanks	≤3,0 µm	≤15,0 µm

Percentage contact area M_r >50% to max. 90% at cutting depth c = Rz/2 and reference line C ref = 0%.

DESIGN NOTES

Please observe our general design notes.

Gap dimension X2

The largest gap dimension occurring on the non-pressurised side of the seal in operation is of vital importance for the function of the seal.

Tolerance recommendation and dimension d2

The admissible gap width, tolerances, guide play and deflection of the guide under load are to be taken into account when designing d2.

Ø d		16 MPa			26 MPa			32 MPa			40 MPa		
	Profile	D	d	X2	D	d	X2	D	d	X2	D	d	X2
... 225	≤11,0 (BR 5,0 x 3,0)	H8	h9	1,1	H8	h9	0,8	H8	h9	0,6	H8	h9	0,5
... 350	>11,0 (BR 7,5 x 5,0)	H8	h9	1,6	H8	h9	1,2	H8	h9	0,9	H8	h9	0,7

Profile recommendation

D	S	L
≤200	10,0	25
>200 ... 400	12,5	25
>400	15,0	30

FITTING & INSTALLATION

Careful fitting is a prerequisite for the correct function of the seal.

MERKEL U-RING SEAL SET 0215

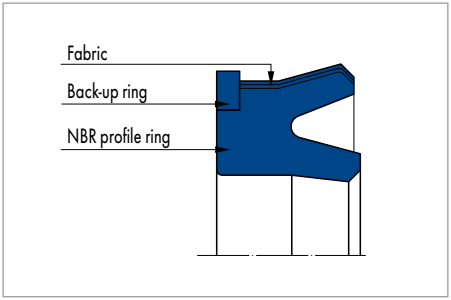

Merkel U-Ring Seal Set 0215

PRODUCT ADVANTAGES

Single-acting piston seal for use in hydraulics or pneumatics

- Low friction due to fabric reinforcement
- Large range of dimensions
- Activated back-up ring prevents extrusion.

APPLICATION

Injection moulding machines, iron and steel technology, presses, marine hydraulics, steel hydraulics engineering, scrap cutters, pneumatic cylinders.

PRODUCT DESCRIPTION

Two-piece Merkel seal set comprising an elastomer U-ring with a fabric reinforcement on the contact area up to over the sealing edge and an active back-up ring.

MATERIAL

U-Ring

Material	Code
NBR U-ring	80 NBR B246
Cotton fabric	BI-NBR B4 B248

Back-up ring

	Material	Code
D <300 mm	Polyacetal POM	POM PO202
D >300 mm	Polyamide	PA 6.G200

Other materials like PTFE bronze back-up ring on enquiry.

OPERATING CONDITIONS

Material	80 NBR B246/BI-NBR B4B248/ POM PO202	80 NBR B246/BI-NBR B4 B248/PA 6. G200
	Temperature range in °C	
Hydraulic oils HL, HLP	−30 ... +100	−30 ... +100
HFA fluids	+5 ... +60	+5 ... +60
HFB fluids	+5 ... +60	+5 ... +60
HFC fluids	−30 ... +60	−30 ... +60
HFD fluids	–	–
Water	+5 ... +100	+5 ... +100
HETG (rapeseed oil)	−30 ... +80	−30 ... +80
HEES (synthetic esters)	−30 ... +80	−30 ... +80
HEPG (glycol)	−30 ... +60	−30 ... +60
Mineral greases	−30 ... +100	−30 ... +100
Pressure p in MPa Hydraulic	25 oder 40*	
Pressure p in MPa Pneumatic	5	
Running speed v in m/s	1,5	

* max. pressure depends on the profile.

Surface quality

Surface roughness	R_a	R_{max}
Sliding surface	0,05 ... 0,3 µm	≤2,5 µm
Groove base	≤1,6 µm	≤6,3 µm
Groove flanks	≤3,0 µm	≤15,0 µm

Percentage contact area M_r >50% to max. 90% at cutting depth c = Rz/2 and reference line C ref = 0%.

DESIGN NOTES

Please observe our general design notes.

Back-up ring height h	16 MPa			26 MPa		
	D	d	X2	D	d	X2
1,5	H8	h10	0,50	H8	h10	0,50
2,5	H8	h10	0,80	H8	h10	0,70
3,0	H8	h10	0,80	H8	h10	0,70
3,5	H8	h10	1,20	H8	h10	1,00
4,0	H8	h10	1,20	H8	h10	1,00
5,0	H8	h10	1,80	H8	h10	1,40
6,0	H8	h10	1,80	H8	h10	1,40
8,0	H8	h10	2,00	H8	h10	1,60

Back-up ring height h	32 MPa			40 MPa		
	D	d	X2	D	d	X2
1,5	H8	h10	0,40	H8	h10	0,30
2,5	H8	h10	0,60	H8	h10	0,40
3,0	H8	h10	0,60	H8	h10	0,40
3,5	H8	h10	0,65	H8	h10	0,50
4,0	H8	h10	0,65	H8	h10	0,50
5,0	H8	h10	0,90	H8	h10	0,70
6,0	H8	h10	0,90	H8	h10	0,70
8,0	H8	h10	1,10	H8	h10	0,90

Gap dimension X2

The largest gap dimension occurring on the non-pressurised side of the seal in operation is of vital importance for the function of the seal.

Tolerance recommendation and dimension d2

The admissible gap width, tolerances, guide play and deflection of the guide under load are to be taken into account when designing d2.

FITTING & INSTALLATION

Careful fitting is a prerequisite for the correct function of the seal.

MERKEL U-RING SEAL SET 0217

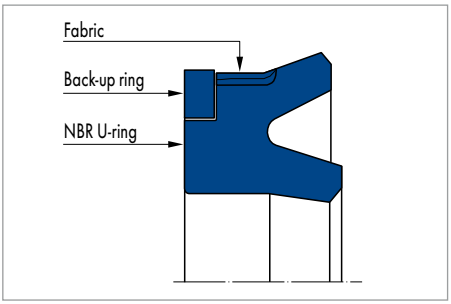

Merkel U-Ring Seal Set 0217

PRODUCT ADVANTAGES

Single-acting piston seal for use in hydraulics or pneumatics

- Low friction due to fabric reinforcement
- Large range of dimensions
- Activated back-up ring prevents extrusion.

APPLICATION

Pneumatic applications.

PRODUCT DESCRIPTION

Two-piece Merkel seal set comprising an elastomer U-ring with an elastomer sealing edge, a fabric reinforcement on the contact area and an active back-up ring.

MATERIAL

U-ring

Material	Code
NBR U-ring	80 NBR B246
Cotton fabric	BI-NBR B4 B248

Back-up ring

	Material	Code
D <300 mm	POM	POM PO202
D >300 mm	Polyamide	PA 6.G200

Other materials like PTFE bronze back-up ring on enquiry.

OPERATING CONDITIONS

Material	80 NBR B246/ BI-NBR B4B248/ POM PO202	80 NBR B246/ BI-NBR B4 B248/ PA 6.G200
	Temperature range in °C	
Hydraulic oils HL, HLP	−30 ... +100	−30 ... +100
HFA fluids	+5 ... +60	+5 ... +60
HFB fluids	+5 ... +60	+5 ... +60
HFC fluids	−30 ... +60	−30 ... +60
HFD fluids	–	–
Water	+5 ... +100	+5 ... +100
HETG (rapeseed oil)	−30 ... +80	−30 ... +80
HEES (synthetic esters)	−30 ... +80	−30 ... +80
HEPG (glycol)	−30 ... +60	−30 ... +60
Mineral greases	−30 ... +100	−30 ... +100
Pressure p in MPa Hydraulic	25 oder 40*	
Pressure p in MPa Pneumatic	5	
Running speed v in m/s	1,5	

* max. pressure depends on the profile.

Surface quality

Surface roughness	R_a	R_{max}
Sliding surface	0,05 ... 0,3 µm	≤2,5 µm
Groove base	≤1,6 µm	≤6,3 µm
Groove flanks	≤3,0 µm	≤15,0 µm

Percentage contact area M_r >50% to max. 90% at cutting depth c = Rz/2 and reference line C ref = 0%.

DESIGN NOTES

Please observe our general design notes.

Max. admissible gap dimensions

Back-up ring height h	16 MPa			26 MPa		
	D	d	X2	D	d	X2
1,5	H8	h10	0,50	H8	h10	0,50
2,5	H8	h10	0,80	H8	h10	0,70
3,0	H8	h10	0,80	H8	h10	0,70
3,5	H8	h10	1,20	H8	h10	1,00
4,0	H8	h10	1,20	H8	h10	1,00
5,0	H8	h10	1,80	H8	h10	1,40
6,0	H8	h10	1,80	H8	h10	1,40
8,0	H8	h10	2,00	H8	h10	1,60

Back-up ring height h	32 MPa			40 MPa		
	D	d	X2	D	d	X2
1,5	H8	h10	0,40	H8	h10	0,30
2,5	H8	h10	0,60	H8	h10	0,40
3,0	H8	h10	0,60	H8	h10	0,40
3,5	H8	h10	0,65	H8	h10	0,50
4,0	H8	h10	0,65	H8	h10	0,50
5,0	H8	h10	0,90	H8	h10	0,70
6,0	H8	h10	0,90	H8	h10	0,70
8,0	H8	h10	1,10	H8	h10	0,90

Gap dimension X2

The largest gap dimension occurring on the non-pressurised side of the seal in operation is of vital importance for the function of the seal.

Tolerance recommendation and dimension d2

The admissible gap width, tolerances, guide play and deflection of the guide under load are to be taken into account when designing d2.

FITTING & INSTALLATION

Careful fitting is a prerequisite for the correct function of the seal.

MERKEL OMEGAT OMK-PU

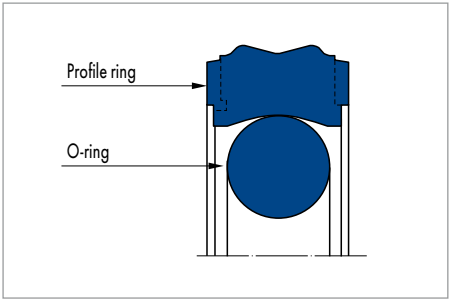

Merkel Omegat OMK-PU

MATERIAL

Profile ring

Material	Code	Hardness
Polyurethane	95 AU V142	95 Shore A

Elastomer profile ring

Material	Code	Hardness
Nitrile rubber NBR	70 NBR B276	70 Shore A

Other materials are available on request.

PRODUCT DESCRIPTION

Two-piece Merkel piston seal set comprising one polyurethane profile ring with one O-ring as a pre-load component.

PRODUCT ADVANTAGES

Merkel Omegat OMK-PU is used for sealing pistons with pressure on both sides for medium duty applications, and is also designed for housings according to ISO 7425 , Part 1

- Increased sealing effect
- Robust design
- Requires small housing
- Easy fitting.

APPLICATION

Industrial vehicles, agricultural machinery, cranes, standard cylinders.

OPERATING CONDITIONS

Material	95 AU V142/ 70 NBR B276
	Temperature range in °C
Hydraulic oils HL, HLP	−30 ... +100
HFA fluids	+5 ... +50
HFB fluids	+5 ... +50
HFC fluids	−30 ... +40
HFD fluids	–
Water	+5 ... +50
HETG (rapeseed oil)	−30 ... +60
HEES (synthetic esters)	−30 ... +80
HEPG (glycol)	−30 ... +50
Mineral greases	−30 ... +100
Pressure p in MPa	25
Running speed v in m/s	0,5

Surface quality

Surface roughness	R_a	R_{max}
Sliding surface	0,05 ... 0,3 µm	≤2,5 µm
Groove base	≤1,6 µm	≤6,3 µm
Groove flanks	≤3,0 µm	≤15,0 µm

Percentage contact area M_r >50% to max. 90% at cutting depth c = Rz/2 and reference line C ref = 0%.

DESIGN NOTES

Please observe our general design notes.

Gap dimension

The largest gap dimension occurring on the non-pressurised side of the seal in operation is of vital importance for the function of the seal.

Profile	Max. permissible gap dimension			
	16 MPa		26 MPa	
	60 °C	80 °C	60 °C	80 °C
≤10,5	0,50	0,40	0,35	0,24

Tolerance recommendation and dimension d2

When designing d2, the admissible gap width, tolerances, guide play and deflection of the guide under load are to be taken into account. Regard must be paid to the dimensions d1 and dF in connection with the guide element used.

Tolerance recommendations for piston designs with guide ring

	16 MPa		26 MPa	
Nominal Ø D	D	d	D	d
≤200	H8	h7	H8	h7

Tolerance recommendations for piston designs with metallic guide

Nominal Ø D	D	d
≤80	H9	f8
80 ... 160	H8	f7
160 ... 200	H7	f7

FITTING & INSTALLATION

Careful fitting is a prerequisite for the correct function of the seal.

MERKEL OMEGAT OMK-E

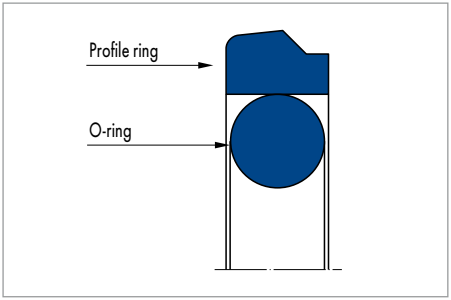

Merkel Omegat OMK-E

PRODUCT DESCRIPTION

Two-piece Merkel seal set for sealing pistons, consisting of one PTFE profile ring and an O-ring as a pre-load component.

PRODUCT ADVANTAGES

Merkel Omegat OMK-E can be used where a sealing piston has pressure on one side, amongst others, in standardised housings according to ISO 7425/1. Rod diameters in agreement with ISO 3320.

- Very high resistance to pressure and hardness
- Good thermal conductivity
- Very good protection against extrusion
- High resistance to abrasion
- Low friction, free of stick-slip.

APPLICATION

Handling equipment, agricultural machinery, injection moulding machines, presses, marine hydraulics, industrial vehicles, cranes, mills, control and regulation equipment.

WERKSTOFF

Profilring aus PTFE

Material	Code
PTFE bronze compound	PTFE B602
PTFE glass MoS_2 compound	PTFE GM201

O-ring

Material	Code	Hardness
NBR	70 NBR B276	70 Shore A
FKM	70 FKM K655	70 Shore A

OPERATING CONDITIONS

Material	PTFE GM201/ 70 NBR B276	PTFE B602/ 70 NBR B276	PTFE B602/ 70 FKM K655
	Temperature range in °C		
Hydraulic oils HL, HLP	−30 ... +100	−30 ... +100	−10 ... +200
HFA fluids	+5 ... +60	–	–
HFB fluids	+5 ... +60	–	–
HFC fluids	−30 ... +60	–	–
HFD fluids	–	–	−10 ... +200
Water	+5 ... +100	–	–
HETG (rapeseed oil)	−30 ... +80	−30 ... +80	−10 ... +80
HEES (synthetic esters)	−30 ... +80	−30 ... +80	−10 ... +100
HEPG (glycol)	−30 ... +60	−30 ... +60	−10 ... +80
Mineral greases	−30 ... +100	−30 ... +100	−10 ... +200
Pressure p in MPa	40		
Running speed v in m/s	5		

Surface quality

Surface roughness	R_a	R_{max}
Sliding surface	0,05 ... 0,3 µm	≤2,5 µm
Groove base	≤1,6 µm	≤6,3 µm
Groove flanks	≤3,0 µm	≤15,0 µm

Percentage contact area M_r >50% to max. 90% at cutting depth c = Rz/2 and reference line C ref = 0%.

DESIGN NOTES

Please observe our general design notes.

Gap dimension

The largest gap dimension occurring on the non-pressurised side of the seal in operation is of vital importance for the function of the seal.

Profile		Max. permissible gap dimension			
L	Profile	16 MPa	26 MPa	32 MPa	40 MPa
2,2	2,45	0,35	0,30	–	–
3,2	3,65	0,40	0,35	–	–
4,2	5,35	0,50	0,40	0,30	–
6,3	7,55	0,55	0,45	0,35	0,30
8,1	10,25	0,60	0,50	0,40	0,40
8,1	12,00	0,70	0,60	0,55	0,50
9,5	13,65	0,75	0,65	0,60	0,55

Tolerance recommendation and dimension d2

The admissible gap width, tolerances, guide play and deflection of the guide under load are to be taken into account when designing d2.

Tolerance recommendations – for non-metallic guides

2,45 ... 7,55	16 MPa		26 MPa		32 MPa		40 MPa	
Nominal Ø D	D	d	D	d	D	d	D	d
<270	H8	h8	H8	h8	H8	h8	H8	h8

10,25	16 MPa		26 MPa		32 MPa		40 MPa	
Nominal Ø D	D	d	D	d	D	d	D	d
<500	H8	h8	H8	h8	H8	h8	H8	h8
500 ... 690	H8	h7	H8	h7	H8	h7	H8	h7

12,00	16 MPa		26 MPa		32 MPa		40 MPa	
Nominal Ø D	D	d	D	d	D	d	D	d
<500	H8	h8	H8	h8	H8	h8	H8	h8
500 ... 690	H8	h7	H8	h7	H8	h7	H8	h7

13,65	16 MPa		26 MPa		32 MPa		40 MPa	
Nominal Ø D	D	d	D	d	D	d	D	d
<1000	H8	h7	H8	h7	H8	h7	H8	h7
1000 ... 1100	H8	h7	H8	h7	H7	h7	H7	h7

Regard must be paid to the dimensions d1 and dF in connection with the guide element used.

Material selection table

	PTFE GM201/ 70 NBR B276 (PTFE-Glass-MoS_2/NBR)	PTFE B602/ 70 NBR B276 (PTFE bronze/NBR)	PTFE B602/ 70 FKM K655 (PTFE bronze/FKM)
Oil hydraulics −30 ... +100 °C	◑	●	○
Oil hydraulics −10 ... +200 °C	○	○	●
Short stroke, high frequency	●	○	○
Water hydraulics	●	○	○
Soft counterface	●	○	○

● = suitable; ◑ = possible; ○ = not suitable.

FITTING & INSTALLATION

Careful fitting is a prerequisite for the correct function of the seal. When mounting the Merkel Omegat OMK-E, ensure correct placement of the sealing edge to the pressure direction. A fitting jig facilitates the installation of small Omegat rings.

MERKEL OMEGAT OMK-ES

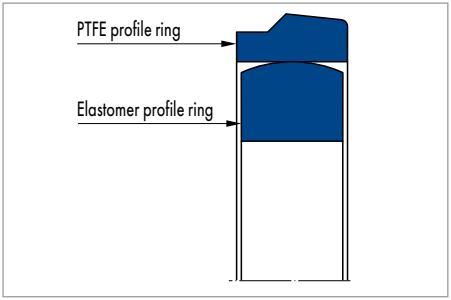

Merkel Omegat OMK-ES

PRODUCT ADVANTAGES

The Merkel Omegat OMK-ES is for use where sealing pistons have pressure on one side. The Merkel Omegat OMK-ES series is designed especially for large diameters and for heavy duty hydraulic applications

- Very high resistance to pressure
- Design prevents twisting
- Very good protection against extrusion
- High resistance to abrasion
- Good thermal conductivity
- Low friction, free of stick-slip
- High contact pressure due to elastomer profile ring.

PRODUCT DESCRIPTION

Two-piece Merkel seal set for sealing pistons, consisting of one PTFE profile ring and an elastomer profile ring as a pre-load component.

APPLICATION

Injection moulding machines, presses, marine hydraulics, manipulators, mills, steel hydraulics engineering, large cylinders.

MATERIAL

PTFE profile ring

Material	Code
PTFE bronze compound	PTFE B602
PTFE glass MoS_2 compound	PTFE GM201

Elastomer profile ring

Material	Code	Hardness
Nitrile rubber NBR	80 NBR B246	80 Shore A

Other materials are available on request.

OPERATING CONDITIONS

Material	PTFE B602/ 80 NBR B246	PTFE GM201/ 80 NBR B246
	Temperature range in °C	
Hydraulic oils HL, HLP	−30 ... +100	−30 ... +100
HFA fluids	–	+5 ... +60
HFB fluids	–	+5 ... +60
HFC fluids	–	−30 ... +60
HFD fluids	–	–
Water	–	+5 ... +100
HETG (rapeseed oil)	−30 ... +80	−30 ... +80
HEES (synthetic esters)	−30 ... +80	−30 ... +80
HEPG (glycol)	−30 ... +60	−30 ... +60
Mineral greases	−30 ... +100	−30 ... +100
Pressure p in MPa	40	
Running speed v in m/s	5	

Surface quality

Surface roughness	R_a	R_{max}
Sliding surface	0,05 ... 0,3 µm	≤2,5 µm
Groove base	≤1,6 µm	≤6,3 µm
Groove flanks	≤3,0 µm	≤15,0 µm

Percentage contact area M_r >50% to max. 90% at cutting depth c = Rz/2 and reference line C ref = 0%.

DESIGN NOTES

Please observe our general design notes.

Gap dimension

The largest gap dimension occurring on the non-pressurised side of the seal in operation is of vital importance for the function of the seal.

Profile		Max. permissible gap dimension			
L	Profile	16 MPa	26 MPa	32 MPa	40 MPa
10,0	10,0	0,60	0,50	0,40	0,40
12,5	12,5	0,75	0,65	0,55	0,50
15,0	15,0	0,75	0,65	0,55	0,50
17,5	17,5	0,75	0,65	0,55	0,50
20,0	20,0	0,80	0,70	0,60	0,55

Tolerance recommendation and dimension d2

The admissible gap width, tolerances, guide play and deflection of the guide under load are to be taken into account when designing d2.

16 MPa			26 MPa			32 MPa			40 MPa		
Nominal Ø D	D	d	Nominal Ø D	D	d	Nominal Ø D	D	d	Nominal Ø D	D	d
100 ... 500	H8	h8	100 ... 500	H8	h8	100 ... 500	H8	h8	100 ... 500	H8	h8
>500 ... 1000	H8	h8	>500 ... 1000	H8	h8	>500 ... 1000	H8	h8	>500 ... 1000	H7	h7

FITTING & INSTALLATION

Careful fitting is a prerequisite for the correct function of the seal.

MERKEL OMEGAT OMK-MR

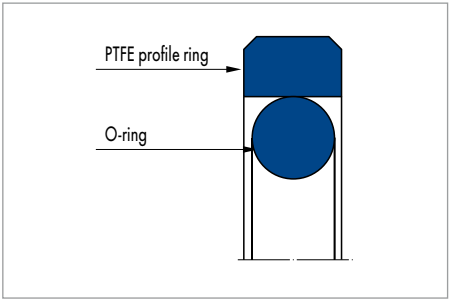

Merkel Omegat OMK-MR

PRODUCT DESCRIPTION

Two-piece Merkel seal set for sealing pistons, consisting of one PTFE profile ring and an O-ring as a pre-load component.

PRODUCT ADVANTAGES

Merkel Omegat OMK-MR is used where a piston has pressure on both sides. OMK-MR is provided with pressure-compensation grooves for rapid pressure change

- Very high resistance to pressure and hardness
- Good thermal conductivity
- Very good protection against extrusion
- High resistance to abrasion
- Low friction, free of stick-slip.

APPLICATION

Presses, agricultural machinery, injection moulding machines, mills, marine hydraulics, industrial vehicles, cranes, handling equipment, control and regulation equipment.

MATERIAL

PTFE profile ring

Material	Code
PTFE bronze compound	PTFE B602
PTFE glass MoS_2 compound	PTFE GM201

O-ring

Material	Code	Hardness
NBR	70 NBR B276	70 Shore A
FKM	70 FKM K655	70 Shore A

OPERATING CONDITIONS

Material	PTFE B602/ 70 NBR B276	PTFE B602/ 70 NBR B276	PTFE B602/ 70 FKM K655
	Temperature range in °C		
Hydraulic oils HL, HLP	−30 ... +100	−30 ... +100	−10 ... +200
HFA fluids	–	–	–
HFB fluids	–	–	–
HFC fluids	–	–	–
HFD fluids	–	–	−10 ... +200
Water	–	–	–
HETG (rapeseed oil)	−30 ... +80	−30 ... +80	−10 ... +80
HEES (synthetic esters)	−30 ... +80	−30 ... +80	−10 ... +100
HEPG (glycol)	−30 ... +60	−30 ... +60	−10 ... +80
Mineral greases	−30 ... +100	−30 ... +100	−10 ... +200
Pressure p in MPa	40		
Running speed v in m/s	5		

Surface quality

Surface roughness	R_a	R_{max}
Sliding surface	0,05 ... 0,3 µm	≤2,5 µm
Groove base	≤1,6 µm	≤6,3 µm
Groove flanks	≤3,0 µm	≤15,0 µm

Percentage contact area M_r >50% up to max. 90% at cutting depth c = Rz/2 and reference line C ref = 0%.

DESIGN NOTES

Please observe our general design notes.

Gap dimension

The largest gap dimension occurring on the non-pressurised side of the seal in operation is of vital importance for the function of the seal.

Profile		Max. permissible gap dimension			
L	Profile	16 MPa	26 MPa	32 MPa	40 MPa
2,2	2,45	0,35	0,30	–	–
3,2	3,65	0,40	0,35	–	–
4,2	5,35	0,50	0,40	0,30	–
6,3	7,55	0,55	0,45	0,35	0,30
8,1	10,25	0,60	0,50	0,40	0,40
8,1	12,00	0,70	0,60	0,55	0,50
9,5	13,65	0,75	0,65	0,60	0,55

Tolerance recommendation and dimension d2

The admissible gap width, tolerances, guide play and deflection of the guide under load are to be taken into account when designing d2.

Tolerance recommendations – for non-metallic guides

		16 MPa		26 MPa		32 MPa		40 MPa	
Nominal Ø D	Profile	D	d	D	d	D	d	D	d
<40	2,45 ... 3,75	H8	h9	H8	h9	–	–	–	–
<100	5,50	H8	h8	H8	h8	H8	h8	–	–
<500	7,75 ... 12,25	H8	h8	H8	h8	H8	h8	H8	h8
<660	12,25	H8	h7	H8	h7	H8	h7	H7	h7
<1100	12,25 ... 14,0	H8	h7	H8	h7	H7	h7	H7	h7

Regard must be paid to the dimensions d1 and dF in connection with the guide element used.

Material selection table

	PTFE M201/ 70 NBR B276 (PTFE Glass-MoS_2/NBR)	PTFE B602/ 70 NBR B276 (PTFE bronze/NBR)	PTFE B602/ 70 FKM K655 (PTFE bronze/FKM)
Oil hydraulics −30 ... +100 °C	◑	●	○
Oil hydraulics −10 ... +200 °C	○	○	●
Short stroke, high frequency	●	○	○
Water hydraulics	●	○	○
Soft counterface	●	○	○

● = suitable; ◑ = possible; ○ = not suitable

FITTING & INSTALLATION

Careful fitting is a prerequisite for the correct function of the seal.

MERKEL OMEGAT OMK-S

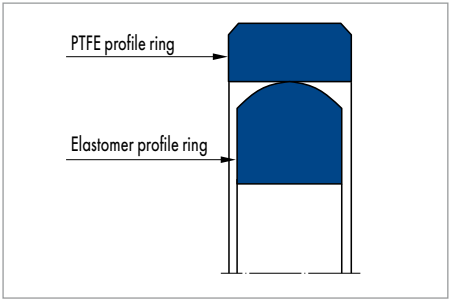

Merkel Omegat OMK-S

PRODUCT DESCRIPTION

Two-piece Merkel seal set for sealing pistons consisting of one PTFE profile ring and one elastomer profile ring as a pre-load component. The seal set is designed for heavy duty hydraulic applications.

PRODUCT ADVANTAGES

The Merkel Omegat OMK-S can be used where a piston has pressure on both sides and is designed especially for large diameters

- Very high resistance to pressure
- Design prevents twisting
- Very good protection against extrusion
- High resistance to abrasion
- Good thermal conductivity
- Low friction, free of stick-slip
- High contact pressure due to elastomer profile ring.

APPLICATION

Injection moulding machines, manipulators, mills, steel hydraulics engineering, marine hydraulics, presses, large cylinders.

MATERIAL

PTFE profile ring

Material	Code
PTFE bronze compound	PTFE B602
PTFE glass MoS_2 compound	PTFE GM201

Elastomer profile ring

Material	Code	Hardness
Nitrile rubber NBR	80 NBR B246	80 Shore A

OPERATING CONDITIONS

Material	PTFE B602/ 70 NBR B246	PTFE GM201/ 80 NBR B246
	Temperature range in °C	
Hydraulic oils HL, HLP	−30 ... +100	−30 ... +100
HFA fluids	–	+5 ... +60
HFB fluids	–	+5 ... +60
HFC fluids	–	−30 ... +60
HFD fluids	–	–
Water	–	+5 ... +100
HETG (rapeseed oil)	−30 ... +80	−30 ... +80
HEES (synthetic esters)	−30 ... +80	−30 ... +80
HEPG (glycol)	−30 ... +60	−30 ... +60
Mineral greases	−30 ... +100	−30 ... +100
Pressure p in MPa	40	
Running speed v in m/s	5	

Surface quality

Surface roughness	R_a	R_{max}
Sliding surface	0,05 ... 0,3 µm	≤2,5 µm
Groove base	≤1,6 µm	≤6,3 µm
Groove flanks	≤3,0 µm	≤15,0 µm

Percentage contact area M_r >50% to max. 90% at cutting depth c = Rz/2 and reference line C ref = 0%.

DESIGN NOTES

Please observe our general design notes.

Gap dimension

The largest gap dimension occurring on the non-pressurised side of the seal in operation is of vital importance for the function of the seal.

Profile		Max. permissible gap dimension			
L	Profile	16 MPa	26 MPa	32 MPa	40 MPa
10,0	10,0	0,60	0,50	0,40	0,40
12,5	12,5	0,75	0,65	0,55	0,50
15,0	15,0	0,75	0,65	0,55	0,50
17,5	17,5	0,75	0,65	0,55	0,50
20,0	20,0	0,80	0,70	0,60	0,55

Tolerance recommendation and dimension d2

The admissible gap width, tolerances, guide play and deflection of the guide under load are to be taken into account when designing d2.

Tolerance recommendations – for non-metallic guides

16 MPa			26 MPa			32 MPa			40 MPa		
Nominal Ø D	D	d	Nominal Ø D	D	d	Nominal Ø D	D	d	Nominal Ø D	D	d
100 ... 500	H8	h8	100 ... 500	H8	h8	100 ... 500	H8	h8	100 ... 500	H8	h8
>500 ... 1000	H8	h8	>500 ... 1000	H8	h8	>500 ... 1000	H8	h8	>500 ... 1000	H7	h7

FITTING & INSTALLATION

Careful fitting is a prerequisite for the correct function of the seal.

MERKEL COMPACT SEAL SIMKO 300

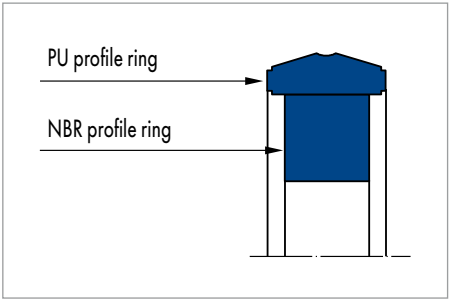

Merkel Compact Seal Simko 300

PRODUCT DESCRIPTION

Two-piece Merkel Compact Seal Simko 300 comprising one profile ring with pronounced sealing edge and one contact pressure element for producing the pre-load.

PRODUCT ADVANTAGES

Double-acting Merkel piston seal

- Good static and dynamic tightness
- Low friction, smooth movement even at low running speeds
- Contact pressure element with rectangular cross-section, prevents twisting in the housing
- Standardised housings according to ISO 7425
- Low axial housing heights.

APPLICATION

Earth moving equipment, agricultural machinery, injection moulding machines, industrial vehicles, cranes, loading platforms.

MATERIAL

Profile ring

Material	Code	Hardness
Polyurethane	98 AU 928	98 Shore A

Contact pressure element
D ≤63

Material	Code	Hardness
Nitrile rubber NBR	72 NBR 872	72 Shore A

Contact pressure element
D >63

Material	Code	Hardness
Nitrile rubber NBR	80 NBR 709	80 Shore A

OPERATING CONDITIONS

Material	98 AU 928/72 NBR 872 98 AU 928/80 NBR 709
	Temperature range in °C
Hydraulic oils HL, HLP	−30 ... +100
HFA fluids	+5 ... +50
HFB fluids	+5 ... +50
HFC fluids	−30 ... +40
HFD fluids	–
Water	+5 ... +40
HETG (rapeseed oil)	−30 ... +60
HEES (synthetic esters)	−30 ... +60
HEPG (glycol)	−30 ... +40
Mineral greases	−30 ... +100
Pressure p in MPa	40
Running speed v in m/s	0,5

Surface quality

Surface roughness	R_a	R_{max}
Sliding surface	0,05 ... 0,3 µm	≤2,5 µm
Groove base	≤1,6 µm	≤6,3 µm
Groove flanks	≤3,0 µm	≤15,0 µm

Percentage contact area M_r >50% to max. 90% at cutting depth c = Rz/2 and reference line C ref = 0%.

DESIGN NOTES

Please observe our general design notes.

Gap dimension

The largest gap dimension occurring on the non-pressurised side of the seal in operation is of vital importance for the function of the seal.

Profile	Max. permissible gap dimension			
	16 MPa	26 MPa	32 MPa	40 MPa
3,2	0,30	0,20	–	–
4,2	0,40	0,30	0,20	–
6,3	0,50	0,40	0,30	0,25
8,1	0,60	0,50	0,40	0,35
10,5	0,65	0,55	0,45	0,40

Tolerance recommendation and dimension d2

The admissible gap width, tolerances, guide play and deflection of the guide under load are to be taken into account when designing d2.

Nominal Ø D	D	d
≤200	H9	h9

FITTING & INSTALLATION

Careful fitting is a prerequisite for the correct function of the seal.

MERKEL COMPACT SEAL SIMKO 320 X2

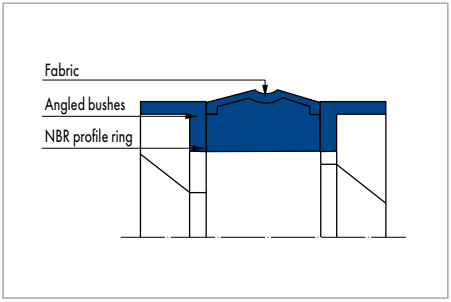

Merkel Compact Seal Simko 320 X2

PRODUCT DESCRIPTION

Three-piece Merkel Compact Seal Simko 320 X2 consisting of a fabric reinforced elastomeric sealing element and two guide back-up rings.

PRODUCT ADVANTAGES

Double-acting Merkel piston seal with integrated guide back-up rings.

APPLICATION

Earth moving equipment, agricultural machinery, cranes, standard cylinders.
We recommend more modern series for new designs.

MATERIAL

Sealing component

Material	Hardness
Nitrile rubber NBR and fabric reinforcement	80 Shore A

Guide back-up rings

Material
Polyamide

OPERATING CONDITIONS

Material	80 NBR 878/Polyamide
	Temperature range in °C
Hydraulic oils HL, HLP	−30 ... +100
HFA fluids	+5 ... +60
HFB fluids	+5 ... +60
HFC fluids	−30 ... +60
HFD fluids	–
Water	+5 ... +90
HETG (rapeseed oil)	−30 ... +80
HEES (synthetic esters)	–
HEPG (glycol)	−30 ... +60
Mineral greases	−30 ... +100
Pressure p in MPa	40
Running speed v in m/s	0,5

Surface quality

Surface roughness	R_a	R_{max}
Sliding surface	0,05 ... 0,3 µm	≤2,5 µm
Groove base	≤1,6 µm	≤6,3 µm
Groove flanks	≤3,0 µm	≤15,0 µm

Percentage contact area M_r >50% to max. 90% at cutting depth c = Rz/2 and reference line C ref = 0%.

DESIGN NOTES

Please observe our general design notes.

Tolerance recommendation

Nominal Ø D	D	d	d_2	d_3
25 ... 250	H11	h11	±0,07	f8

FITTING & INSTALLATION

Careful fitting is a prerequisite for the correct function of the seal.

MERKEL COMPACT SEAL SIMKO 520

Merkel Compact Seal Simko 520

PRODUCT DESCRIPTION

Three-piece Merkel Compact Seal Simko 520 consisting of a fabric reinforced elastomeric sealing element and two guide back-up rings as gap sealing component.

PRODUCT ADVANTAGES

Double-acting Merkel piston seal, preferably for spare parts requirement.

APPLICATION

Earth moving equipment, agricultural machinery, cranes, standard cylinders.
We recommend more modern series for new designs.

MATERIAL

Sealing component

Material	Hardness
Nitrile rubber NBR and fabric reinforcement	80 Shore A

Guide back-up rings

Material	Code
Polyacetal resin	POM 992020

OPERATING CONDITIONS

Material	80 NBR/POM
	Temperature range in °C
Hydraulic oils HL, HLP	−30 ... +100
HFA fluids	+5 ... +60
HFB fluids	+5 ... +60
HFC fluids	−30 ... +60
HFD fluids	–
Water	+5 ... +90
HETG (rapeseed oil)	−30 ... +80
HEES (synthetic esters)	–
HEPG (glycol)	−30 ... +60
Mineral greases	−30 ... +100
Pressure p in MPa	50
Running speed v in m/s	0,5

Surface quality

Surface roughness	R_a	R_{max}
Sliding surface	0,05 ... 0,3 µm	≤2,5 µm
Groove base	≤1,6 µm	≤6,3 µm
Groove flanks	≤3,0 µm	≤15,0 µm

Percentage contact area M_r >50% to max. 90% at cutting depth c = Rz/2 and reference line C ref = 0%.

DESIGN NOTES

Please observe our general design notes.

Gap dimension

The largest gap dimension occurring on the non-pressurised side of the seal in operation is of vital importance for the function of the seal.

Ø range D	Max. permissible gap dimension			
	26 MPa	32 MPa	40 MPa	50 MPa
≤80	0,60	0,55	0,45	0,35
>80	0,65	0,60	0,50	0,40

Tolerance recommendation and dimension d2

The admissible gap width, tolerances, guide play and deflection of the guide under load are to be taken into account when designing d2.

Nominal Ø D	D	d
≤320	H11	h11

FITTING & INSTALLATION

Careful fitting is a prerequisite for the correct function of the seal.

MERKEL COMPACT SEAL L 27

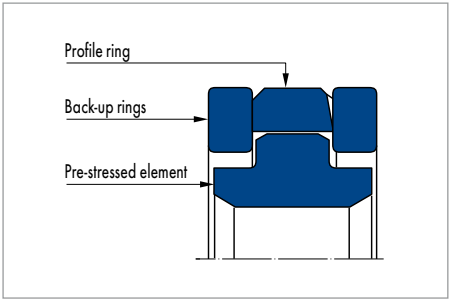

Merkel Compact Seal L 27

PRODUCT DESCRIPTION

Four-piece Merkel Compact Seal L 27 comprising one pre-load component (NBR), two active back-up rings (POM) and one PTFE bronze profile ring.

PRODUCT ADVANTAGES

The Merkel Piston Seal L 27 is used where a piston has pressure on both sides. The activated back-up rings offer good protection against extrusion even with gaps for breathing

- Bridges large radial gaps
- Very good protection against extrusion even with pressure peaks
- High resistance to abrasion
- Low friction, free of stick-slip
- High contact pressure due to elastomer profile ring.

APPLICATION

Earth moving equipment, injection moulding machines, presses, excavators.

MATERIAL

PTFE profile ring

Material	Code
PTFE bronze compound	PTFE B602

Pre-load component

Material	Code	Hardness
Nitrile rubber NBR	85 NBR B247/85 NBR B203	85 Shore A

Back-up ring

Material	Code
Polyacetal	POM PO202

OPERATING CONDITIONS

Material	PTFE B602/ 85 NBR B247/ POM PO202	PTFE B602/ 85 NBR B203/ POM PO202
	Temperature range in °C	
Hydraulic oils HL, HLP	−30 ... +100	−30 ... +100
HFA fluids	–	–
HFB fluids	–	–
HFC fluids	–	–
HFD fluids	–	–
Water	–	–
HETG (rapeseed oil)	−30 ... +80	−30 ... +80
HEES (synthetic esters)	−30 ... +80	−30 ... +80
HEPG (glycol)	−30 ... +50	−30 ... +50
Mineral greases	−30 ... +100	−30 ... +100
Pressure p in MPa	50	
Running speed v in m/s	1,5	

Surface quality

Surface roughness	R_a	R_{max}
Sliding surface	0,05 ... 0,3 µm	≤2,5 µm
Groove base	≤1,6 µm	≤6,3 µm
Groove flanks	≤3,0 µm	≤15,0 µm

Percentage contact area M_r >50% to max. 90% at cutting depth c = Rz/2 and reference line C ref = 0%.

DESIGN NOTES

Please observe our general design notes.

Tolerance recommendation

		16 MPa					26 MPa				
Nominal Ø D	Profile	D	d	D2	DF	X2	D	d	D2	DF	X2
... 70	6,0	H8	h9	h9	h8	0,8	H8	h9	h9	h8	0,7
>70 ... 110	8,5	H8	h9	h9	h8	1,2	H8	h9	h9	h8	1,0
>110 ... 200	10,0	H8	h9	h9	h8	1,2	H8	h9	h9	h8	1,0
>200 ... 350	12,5	H8	h9	h9	h8	1,8	H8	h9	h9	h8	1,4

		32 MPa					40 MPa				
Nominal Ø D	Profile	D	d	D2	DF	X2	D	d	D2	DF	X2
... 70	6,0	H8	h9	h9	h8	0,50	H8	h9	h9	h8	0,4
>70 ... 110	8,5	H8	h9	h9	h8	0,65	H8	h9	h9	h8	0,5
>110 ... 200	10,0	H8	h9	h9	h8	0,65	H8	h9	h9	h8	0,5
>200 ... 350	12,5	H8	h9	h9	h8	0,90	H8	h9	h9	h8	0,7

FITTING & INSTALLATION

Careful fitting is a prerequisite for the correct function of the seal.

MERKEL COMPACT SEAL L 43

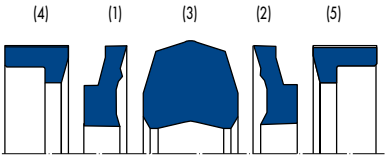

1 & 2 = back-up ring; 3 = sealing element; 4 & 5 = angled bushes

Merkel Compact Seal L 43

PRODUCT ADVANTAGES

The Merkel Piston Seal L 43 is used for sealing pistons with pressure on both sides. The angled rings guide the piston on the cylinder bore.

- No extrusion into the radial sealing gap
- Suitable for rapid pressure change
- Sealing component protected against twisting.

APPLICATION

Earth moving equipment, agricultural machinery, cranes, standard cylinders.

PRODUCT DESCRIPTION

Five-piece Merkel compact seal L 43 comprising one profile ring, two back-up rings and two angled bushes.

MATERIAL

Sealing component

Material	Code	Hardness
Nitrile rubber	78 NBR B281	78 Shore A

Back-up ring

Material	Code
Polyester elastomer	97 TPE TP113

Angled bush

Material	Code
Polyamide with special filling	PA 6.501

OPERATING CONDITIONS

Material	78 NBR B281/97 TPE TP113/PA 6.501
	Temperature range in °C
Hydraulic oils HL, HLP	−30 ... +100
HFA fluids	+5 ... +60
HFB fluids	+5 ... +60
HFC fluids	+5 ... +50
HFD fluids	–
Water	–
HETG (rapeseed oil)	−30 ... +60
HEES (synthetic esters)	−30 ... +80
HEPG (glycol)	−30 ... +50
Mineral greases	−30 ... +100
Pressure p in MPa	40
Running speed v in m/s	0,5

Surface quality

Surface roughness	R_a	R_{max}
Sliding surface	0,05 ... 0,3 µm	≤2,5 µm
Groove base	≤1,6 µm	≤6,3 µm
Groove flanks	≤3,0 µm	≤15,0 µm

Percentage contact area M_r >50% to max. 90% at cutting depth c = Rz/2 and reference line C ref = 0%.

DESIGN NOTES

Please observe our general design notes.

Gap dimension

The largest gap dimension occurring on the non-pressurised side of the seal in operation is of vital importance for the function of the seal.

Tolerance recommendation

Nominal Ø D	D	d	d_2	d_3
40 ... 200	H8	h9	h11	h8

FITTING & INSTALLATION

Careful fitting is a prerequisite for the correct function of the seal.

MERKEL COMPACT SEAL T 19

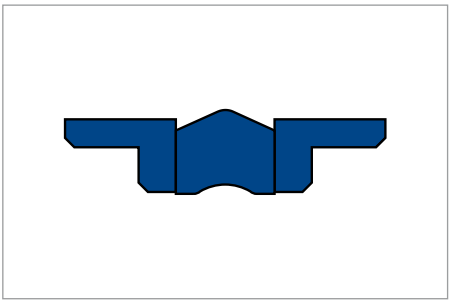

Merkel Compact Seal T 19

PRODUCT ADVANTAGES

The Merkel Compact Seal T 19 is used where a piston has pressure on both sides and is designed mainly for housings according to ISO 6547

- Good guiding
- Highly wear-resistant
- Easy fitting
- Short.

APPLICATION

Agricultural machinery, standard cylinders.
We recommend more modern series for new designs.

PRODUCT DESCRIPTION

Three-piece Merkel Compact Seal T 19 with two angled bushes (POM) and one sealing component of polyurethane.

MATERIAL

Sealing component

Material	Code	Hardness
Novathan (polyurethane)	95 AU V142	95 Shore A

Angled bushes

Material	Hardness
Polyacetal POM	POM PO 202

OPERATING CONDITIONS

Material	95 AU V142
	Temperature range in °C
Hydraulic oils HL, HLP	−30 ... +110
HFA fluids	+5 ... +50
HFB fluids	+5 ... +50
HFC fluids	−30 ... +40
HFD fluids	–
Water	+5 ... +50
HETG (rapeseed oil)	−30 ... +60
HEES (synthetic esters)	−30 ... +80
HEPG (glycol)	−30 ... +50
Mineral greases	−40 ... +100
Pressure p in MPa	21
Running speed v in m/s	0,5

Surface quality

Surface roughness	R_a	R_{max}
Sliding surface	0,05 ... 0,3 µm	≤2,5 µm
Groove base	≤1,6 µm	≤6,3 µm
Groove flanks	≤3,0 µm	≤15,0 µm

Percentage contact area M_r >50% to max. 90% at cutting depth c = Rz/2 and reference line C ref = 0%.

DESIGN NOTES

Please observe our general design notes.

Tolerance recommendation

When designing d2, the admissible gap width, tolerances, guide play and deflection of the guide under load are to be taken into account.

Nominal Ø D	D	d	d2	d3
25 ... 100	H8	h9	h11	h7

FITTING & INSTALLATION

Careful fitting is a prerequisite for the correct function of the seal.

MERKEL COMPACT SEAL TFMA

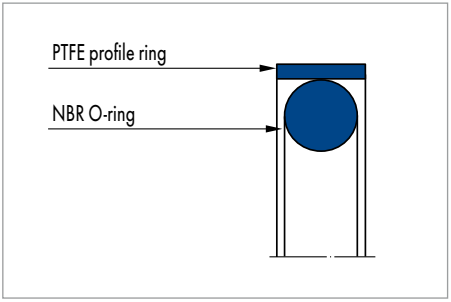

Merkel Compact Seal TFMA

PRODUCT DESCRIPTION

Two-piece Merkel Compact Seal TFMA comprising a profile ring and O-ring as a pre-load component.

PRODUCT ADVANTAGES

Double-acting piston seal for the lower pressure range with the properties of
- Low friction
- Low housing height.

APPLICATION

Standard cylinders, cranes.

MATERIAL

Profile ring

Material	Code
PTFE bronze compound	PTFE 177023

O-ring

Material	Hardness
Nitrile rubber NBR	70 Shore A

OPERATING CONDITIONS

Material	PTFE 177023/NBR
	Temperature range in °C
Hydraulic oils HL, HLP	−30 ... +100
HFA fluids	–
HFB fluids	–
HFC fluids	–
HFD fluids	–
Water	–
HETG (rapeseed oil)	−30 ... +80
HEES (synthetic esters)	–
HEPG (glycol)	−30 ... +60
Mineral greases	−30 ... +100
Pressure p in MPa	16
Running speed v in m/s	2

Surface quality

Surface roughness	R_a	R_{max}
Sliding surface	0,05 ... 0,3 µm	≤2,5 µm
Groove base	≤1,6 µm	≤6,3 µm
Groove flanks	≤3,0 µm	≤15,0 µm

Percentage contact area M_r >50% up to max. 90% at cutting depth c = Rz/2 and reference line C ref = 0%.

DESIGN NOTES

Please observe our general design notes.

Gap dimension

The largest gap dimension occurring on the non-pressurised side of the seal in operation is of vital importance for the function of the seal. We recommend a metal guide H8/f7.

FITTING & INSTALLATION

Careful fitting is a prerequisite for the correct function of the seal.

MERKEL COMPLETE PISTON TDUOH

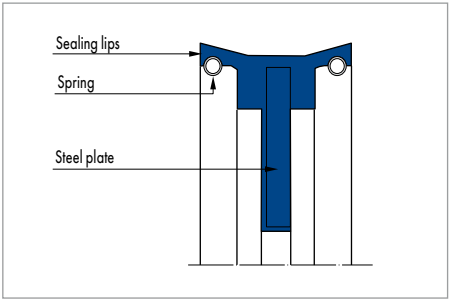

Merkel Complete Piston TDUOH

PRODUCT DESCRIPTION

Merkel Complete Piston TDUOH with steel base plate and vulcanised, spring-loaded sealing lips.

PRODUCT ADVANTAGES

Merkel complete piston for secondary hydraulic applications, preferably for spare parts requirement. Can only absorb low lateral forces.

APPLICATION

Standard cylinders, cranes.

MATERIAL

Sealing lips

Material	Code	Hardness
Nitrile rubber NBR	90 NBR 109	90 Shore A

Springs

Material
Spring steel wire DIN 17223

Base plate

Material
Mild steel

OPERATING CONDITIONS

Material	NBR 60 Shore A
	Temperature range in °C
Hydraulic oils HL, HLP	−30 ... +100
HFA fluids	+5 ... +60
HFB fluids	+5 ... +60
HFC fluids	−30 ... +60
HFD fluids	–
Water	+5 ... +90
HETG (rapeseed oil)	−30 ... +80
HEES (synthetic esters)	–
HEPG (glycol)	−30 ... +60
Mineral greases	−30 ... +100
Pressure p in MPa	→ Diagram
Running speed v in m/s	0,5

Permissible operating pressure

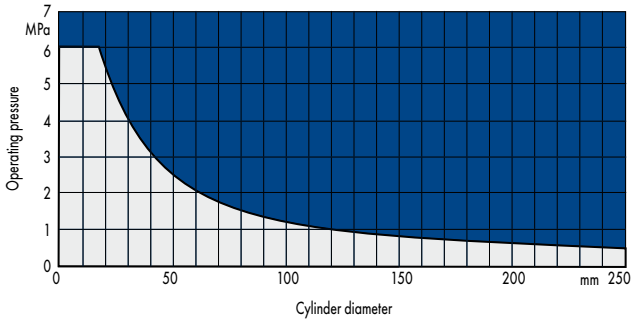

Surface quality

Surface roughness	R_a	R_{max}
Cylinder bore	0,05 ... 0,3 µm	≤2,5 µm

Percentage contact area M_r >50% to max. 90% at cutting depth c = Rz/2 and reference line C ref = 0%.

DESIGN NOTES

Please observe our general design notes.

Tolerance recommendation

The admissible gap width, tolerances, guide play and deflection of the guide under load are to be taken into account when designing d2.

Nominal Ø D	D	d
≤320	H11	h11

FITTING & INSTALLATION

The Merkel Complete Piston TDUOH is pushed onto the pin with the rubber layer on the clamping flange towards the rod and fixed with the fastening. The nut has to be secured.

MERKEL CUP PACKING T WITH SPRING

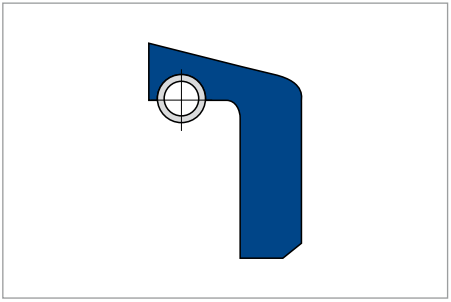

Merkel Cup Packing T with Spring

PRODUCT DESCRIPTION

Spring-loaded lip seal.
Clamping flange for axial fixing in the housing.

PRODUCT ADVANTAGES

Single-acting piston seal for secondary applications and for spare parts requirement.

APPLICATION

Standard cylinders.

MATERIAL

Sealing component

Material	Code	Hardness
Nitrile rubber NBR	88 NBR 101	88 Shore A

OPERATING CONDITIONS

Material	88 NBR 101
	Temperature range in °C
Hydraulic oils HL, HLP	−30 ... +100
HFA fluids	+5 ... +60
HFB fluids	+5 ... +60
HFC fluids	−30 ... +60
HFD fluids	–
Water	+5 ... +90
HETG (rapeseed oil)	−30 ... +80
HEES (synthetic esters)	–
HEPG (glycol)	−30 ... +60
Mineral greases	−30 ... +100
Pressure p in MPa	1
Running speed v in m/s	0,5

Surface quality

Surface roughness	R_a	R_{max}
Sliding surface	0,05 ... 0,3 µm	≤2,5 µm
Groove base	≤1,6 µm	≤6,3 µm
Groove flanks	≤3,0 µm	≤15,0 µm

Percentage contact area M_r >50% to max. 90% at cutting depth c = Rz/2 and reference line C ref = 0%.

DESIGN NOTES

Please observe our general design notes.

Gap dimension

The largest gap dimension occurring on the non-pressurised side of the seal in operation is of vital importance for the function of the seal. $x_2 \leq 0{,}5$.

Tolerance recommendation

Nominal Ø D	D	d
≤550	H11	h10

FITTING & INSTALLATION

The axial compression of the flange should be max. 10% of its thickness. Torque limiting is to be used. The metal clamping parts must not apply any force to the transition zone from clamping flange to sealing lip. To improve the fixing of the cup packing and sealing effect on the flat clamping side, the turning of one or two sealing grooves is recommended.

MERKEL CUP PACKING T WITHOUT SPRING

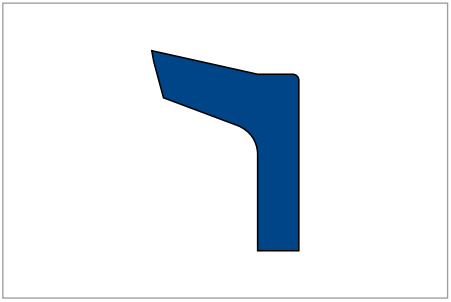

Merkel Cup Packing T without Spring

PRODUCT DESCRIPTION

Lip seal. Clamping flange for axial fixing in the housing.

PRODUCT ADVANTAGES

Single-acting piston seal for secondary applications and for spare parts requirement.

APPLICATION

Standard cylinders.

MATERIAL

Sealing component

Material	Code	Hardness
Nitrile rubber NBR	88 NBR 101	88 Shore A

OPERATING CONDITIONS

Material	88 NBR 101
	Temperature range in °C
Hydraulic oils HL, HLP	−30 ... +100
HFA fluids	+5 ... +60
HFB fluids	+5 ... +60
HFC fluids	−30 ... +60
HFD fluids	–
Water	+5 ... +90
HETG (rapeseed oil)	−30 ... +80
HEES (synthetic esters)	–
HEPG (glycol)	−30 ... +60
Mineral greases	−30 ... +100
Pressure p in MPa	1
Running speed v in m/s	0,5

Surface quality

Surface roughness	R_a	R_{max}
Sliding surface	0,05 ... 0,3 µm	≤2,5 µm
Groove base	≤1,6 µm	≤6,3 µm
Groove flanks	≤3,0 µm	≤15,0 µm

Percentage contact area M_r >50% to max. 90% at cutting depth c = Rz/2 and reference line C ref = 0%.

DESIGN NOTES

Please observe our general design notes.

Gap dimension

The largest gap dimension occurring on the non-pressurised side of the seal in operation is of vital importance for the function of the seal. $x_2 \leq 0{,}5$.

Tolerance recommendation

Nominal Ø D	D	d
≤550	H11	h10

FITTING & INSTALLATION

The axial compression of the flange should be max. 10% of its thickness. Torque limiting is to be used. The metal clamping parts must not apply any force to the transition zone from clamping flange to sealing lip. To improve the fixing of the cup packing and sealing effect on the flat clamping side, the turning of one or two sealing grooves is recommended.

MERKEL CHEVRON SEAL SET EK, EKV

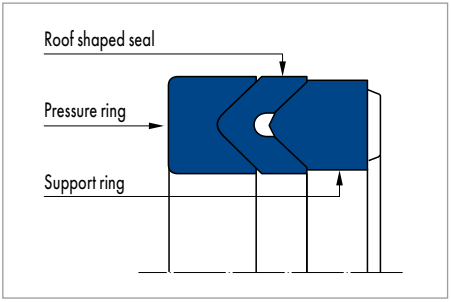

Merkel Chevron Seal Set EK, EKV

PRODUCT DESCRIPTION

Multi-part Merkel Chevron Seal Set comprising one thrust ring, one or two seals and a back-up ring.

PRODUCT ADVANTAGES

Seal set for robust operating conditions, predominantly the provision of spare parts for older plant. Merkel Chevron Seal Set EK, EKV can be used for pistons with pressure on one side or "back to back" for pistons with pressure on both sides

- Proven under extreme conditions
- High durability
- Can be optimally adjusted to the related application
- Functions over a certain time period even with poorer surfaces
- Insensitive to soiling
- For application and design related reasons, fluctuations in the leakage behaviour and in the friction behaviour are to be expected.

APPLICATION

Injection moulding machines, presses, marine hydraulics, scrap cutters, iron and steel industry, special cylinders, steel hydraulics, engineering.

MATERIAL

Pressure ring

Material	Code
Cotton fabric/FKM	BI-FKM
Cotton fabric/FKM	BI-NBR B259

Roof-shaped seal

Material	Code
Cotton fabric/FKM	BI-NBR
Cotton fabric/FKM	BI-FKM

Back-up ring

Material	Code
Cotton fabric/NBR	BI-NBR
Cotton fabric/FKM	BI-FKM
Polyacetal POM	POM

OPERATING CONDITIONS

Material	BI-NBR / 85 NBR	BI-FKM /85 FKM
	Temperature range in °C	
Hydraulic oils HL, HLP	−30 ... +100	−15 ... +140
HFA fluids	+5 ... +60	+5 ... +60
HFB fluids	+5 ... +60	+5 ... +60
HFC fluids	−30 ... +60	−15 ... +60
HFD fluids	–	−15 ... +140
Water	+5 ... +100	+5 ... +80
HETG (rapeseed oil)	−30 ... +80	−15 ... +80
HEES (synthetic esters)	−30 ... +80	−15 ... +100
HEPG (glycol)	−30 ... +60	−15 ... +80
Mineral greases	−30 ... +100	−15 ... +140
Pressure p in MPa	40	
Running speed v in m/s	0,5	

Surface quality

Surface roughness	R_a	R_{max}
Sliding surface	0,05 ... 0,3 µm	≤2,5 µm
Groove base	≤1,6 µm	≤6,3 µm
Groove flanks	≤3,0 µm	≤15,0 µm

Percentage contact area M_r >50% to max. 90% at cutting depth c = Rz/2 and reference line C ref = 0%.

DESIGN NOTES

Please observe our general design notes.

Nominal Ø D	d
≤80	H9/f8
>80 ... 120	H8/f8
>120 ... 500	H8/f7
> 500 ... 630	H8/f7
> 630 ... 800	H8/f7
> 800 ... 1000	H8/f7
>1000 ... 1250	H8/f7

Tolerance recommendation

Nominal Ø D	D	d_1
≤500	H11	–0,3
>500	H10	–0,3

FITTING & INSTALLATION

Careful fitting is a prerequisite for the correct function of the seal.

FORSEAL FOA MADE OF PTFE

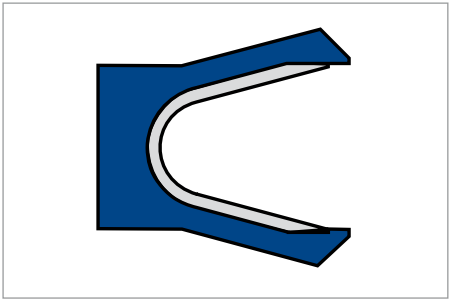

Forseal FOA made of PTFE

PRODUCT ADVANTAGES

Axially moving piston seal, interchangeable for O-ring housings (ARP568, MIL-P-5514)

- Extremely resistant to media and temperature
- Good dry running properties
- Low static and dynamic friction values.

APPLICATION

Hot water valves, accumulators, hydraulic and pneumatic cylinders as well as applications in food processing, medical and chemical technology.

PRODUCT DESCRIPTION

Single acting, U-ring type PTFE seal with metal tension spring.

MATERIAL

Material	Code	Tension spring
PTFE carbon-filled	PTFE 10/F56110	stainless steel (Material No. 1.4310)

OPERATING CONDITIONS

Material	PTFE 10/F56110 + 1.4310
	Temperature range in °C
Hydraulic oils, oil, water, steam, air, solvents, pharmaceutical goods, foodstuffs or all media that do not attack PTFE and stainless steel	−200 ... +260
Pressure p in MPa	30
Running speed v in m/s	15

Material	PTFE 10/F56110 +spring Hastelloy C276 (Not available ex-works)
	Temperature range in °C
Aggressive acids and alkalis	–200 ... +260
Pressure p in MPa	30
Running speed v in m/s	15

Turning-pivoting movements possible. No rotation.

Surface quality

Sealing surfaces, dynamic/static: → Fig.
Lead-in chamfers: R_a <1,6 µm
Sides of groove: R_a <2,5 µm

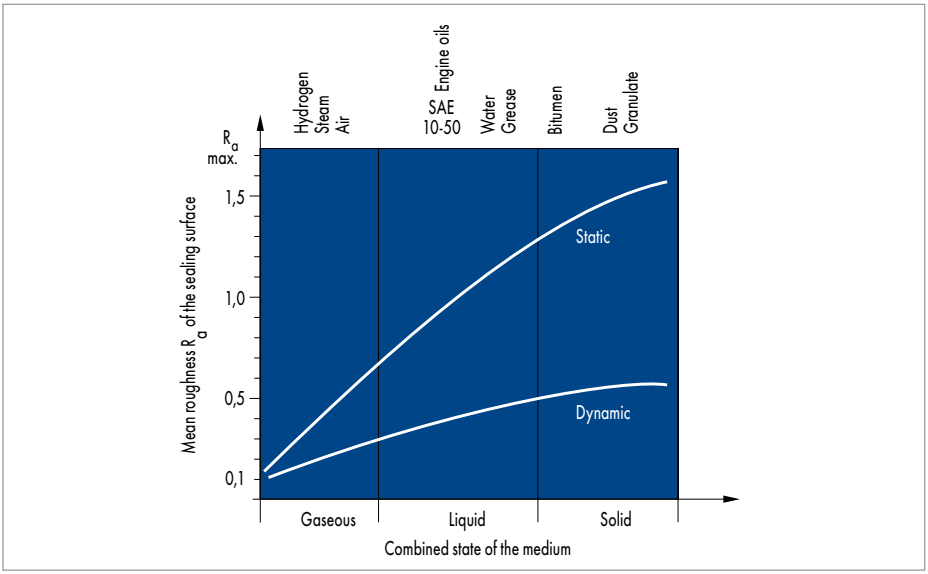

Surface recommendation for sealing surfaces

DESIGN NOTES

Beside the default dimensions, all special dimensions considering the U-ring profiles are available on request without surcharge for the tool. Dimensions available from Ø 10 (piston) to approx. 2000 mm. In general, installation is only possible in split, axially accessible grooves. Installation in half-open grooves possible in exceptional cases.

PRE-SELECTION HYDRAULICS – WIPERS

Temperature figures refer to mineral oils. Due to the large choice of media with different and varying additives, which is not always easily comprehensible, the above operating limits are only recommended values. We recommend testing resistance in the specific case.
Individual instances of the operating limits stated may be exceeded taking into account the related operating conditions. With a long duty cycle, stop-start operation or other difficult operating conditions it is recommended that these values are not simultaneously exploited to the full.

Seal		Standard		
Type	**Material**	**DIN/ISO**	**Examples of use**	
PU 5 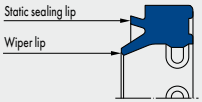 	95 AU V149	6195 A	Optimal price/performance ratio, additional static sealing lip protects against drawing-in of dirt.	
PU 6 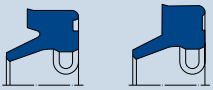 	95 AU V149		High wear resistance, universally applicable with extra functions.	
PU 11 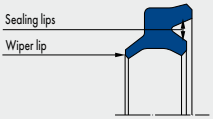 	95 AU V149	6195 C	With additional sealing function.	
PT 1 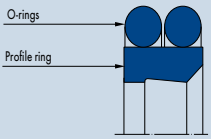 	PTFE bronze NBR PTFE bronze FKM PTFE glass NBR		Stick-slip free operation, well suited for regulation and positioning tasks, high functional safety through additional sealing edge.	

● = very good; ◑ = good; ○ = possibile or satisfactory; ⊗ = not suitable

	Function					Operating Limits		
	single-acting	double-acting	Individual seal	Primary seal	Secondary seal	Pressure (MPa)	Speed (m/s)	Temperature (°C)
	●						2	−30 ... +110
	●						2	−30 ... +110
		●					1	−30 ... +110
		●					5	−30 ... +100

Seal		Standard		
Type	**Material**	**DIN/ISO**	**Examples of use**	
PT 2 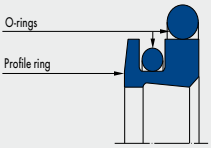	PTFE bronze NBR PTFE bronze FKM		Outstanding regulation and positioning in operation, stick-slip free operation, specifically for large diameters and heavy duty hydraulic applications.	
AUAS 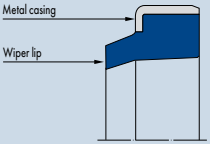	94 AU 925	6195 B	With metal-reinforced punched wiper lip.	
AUAS R 	94 AU 925	6195 B	With metal reinforcement radius on wiper lip.	
AUPS 	94 AU 925		With metal reinforcement, non-protruding wiper lip.	

● = very good; ◑ = good; ○ = possibile or satisfactory; ⊗ = not suitable

	Function					Operating Limits		
	single-acting	double-acting	Individual seal	Primary seal	Secondary seal	Pressure (MPa)	Speed (m/s)	Temperature (°C)
		●					5	−30 ... +100
	●						2	−30 ... +110
	●						2	−30 ... +110
	●						2	−30 ... +110

MERKEL WIPER AS

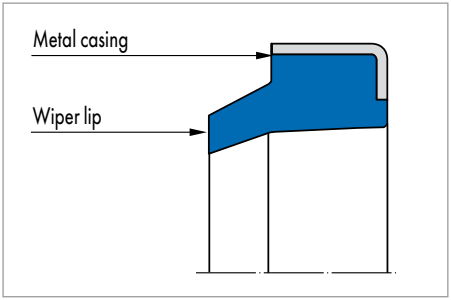

Merkel Wiper AS

PRODUCT DESCRIPTION

Dirt wiper with metal housing; wiper lip protruding.

PRODUCT ADVANTAGES

Single-acting wiper for the protection of cylinders against ingress of dirt, use in standardised housings, amongst others, according to ISO 6195 Type B.

APPLICATION

Standard cylinders.

MATERIAL

Material	Hardness	Metal housing
Nitrile rubber NBR	88 Shore A	unalloyed steel

OPERATING CONDITIONS

Material	88 NBR
	Temperature range in °C
Hydraulic oils HL, HLP	−30 ... +100
HFA fluids	+5 ... +60
HFB fluids	+5 ... +60
HFC fluids	−30 ... +60
HFD fluids	–
Water	+5 ... +90
HETG (rapeseed oil)	−30 ... +80
HEES (synthetic esters)	–
HEPG (glycol)	−30 ... +60
Mineral greases	−30 ... +100
Running speed v in m/s	2

Surface quality

Surface roughness	R_a	R_{max}
Sliding surface	*	*
Groove base	≤1,6 µm	≤6,3 µm
Side of groove	≤3,0 µm	≤15,0 µm

* Surface roughness of the sliding surface to suit the sealing component used.

DESIGN NOTES

Please observe our general design notes.

Tolerance recommendation

Nominal Ø d	D_N
6 ... 400	H8

The tolerance for the Ø d_N is defined by the buffer seal.

Lead-in chamfers

Length and angle are to be designed to suit the rod seal used.

FITTING & INSTALLATION

Careful fitting is a prerequisite for the correct function of the Merkel Wiper AS. Generally, wipers can be quickly and easily fitted by deforming into a kidney shape.

MERKEL WIPER ASOB

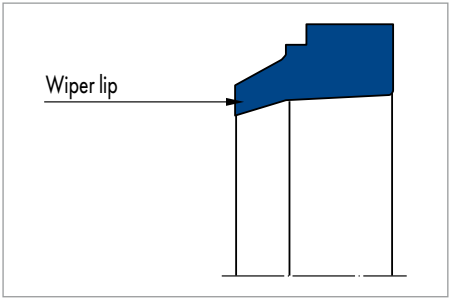

Merkel Wiper ASOB

PRODUCT DESCRIPTION

Dirt wiper with protruding wiper lip without metal reinforcement.

PRODUCT ADVANTAGES

Single-acting wiper for the protection of cylinders against ingress of dirt.

APPLICATION

Standard cylinders.

MATERIAL

Material	Code	Hardness
Nitrile rubber NBR	88 NBR 101	88 Shore A

OPERATING CONDITIONS

Material	88 NBR 101
	Temperature range in °C
Hydraulic oils HL, HLP	−30 ... +100
HFA fluids	+5 ... +60
HFB fluids	+5 ... +60
HFC fluids	−30 ... +60
HFD fluids	–
Water	+5 ... +90
HETG (rapeseed oil)	−30 ... +80
HEES (synthetic esters)	–
HEPG (glycol)	−30 ... +60
Mineral greases	−30 ... +100
Running speed v in m/s	2

Surface quality

Surface roughness	R_a	R_{max}
Sliding surface	*	*
Groove base	≤1,6 µm	≤6,3 µm
Side of groove	≤3,0 µm	≤15,0 µm

* Surface roughness of the sliding surface to suit the sealing component used.

DESIGN NOTES

Please observe our general design notes.

Tolerance recommendation

Nominal Ø d	D	D_1
8 ... 160	H11	H11

The tolerance for the Ø d is defined by the buffer seal.

Lead-in chamfers

Length and angle are to be designed to suit the rod seal used.

FITTING & INSTALLATION

Careful fitting is a prerequisite for the correct function of the wiper.
Merkel Wiper ASOB wipers can be quickly and easily fitted by deforming into a kidney shape.

MERKEL WIPER AUPS

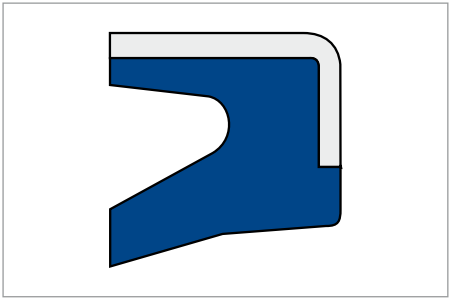

Merkel Wiper AUPS

PRODUCT ADVANTAGES

Single-acting wiper for the protection of cylinders against ingress of dirt; especially also as protective component and sealing component for pivoting bearings, amongst others, in standardised housings according to ISO 6195 Type B

- Secure seating in the housing (press fitting), no rotation with the shaft on pivoting motion
- Re-greasing of pivoting bearings possible without problems; lip opens at low overpressure; old grease can escape
- Low axial housing height, wiper lip not protruding
- Axially open, easy to manufacture housing.

PRODUCT DESCRIPTION

Dirt wiper with metal housing; wiper lip flush with housing.

APPLICATION

Earth moving equipment, agricultural machinery, loading platforms, pivoting pin seal, industrial vehicle, cranes, support cylinders.

MATERIAL

Material	Code	Hardness	Metal housing
Polyurethane	94 AU 925	94 Shore A	unalloyed steel DIN 1624

OPERATING CONDITIONS

Material	94 AU 925
	Temperature range in °C
Hydraulic oils HL, HLP	−30 ... +110
HFA fluids	+5 ... +50
HFB fluids	+5 ... +50
HFC fluids	−30 ... +40
HFD fluids	–
Water	+5 ... +40

Material	94 AU 925
	Temperature range in °C
HETG (rapeseed oil)	−30 ... +60
HEES (synthetic esters)	−30 ... +80
HEPG (glycol)	−30 ... +40
Mineral greases	−30 ... +110
Running speed v in m/s	2 m/s

Surface quality

Surface roughness	R_a	R_{max}
Sliding surface	0,05 ... 0,3 µm*	≤2,5 µm*
Groove base	≤1,6 µm	≤6,3 µm
Side of groove	≤3,0 µm	≤15,0 µm

percentage contact area Mr>50% up to max 90% at cutting depth c = Rz/2 and reference line C ref = 0%.
* On usage as a wiper, surface roughness of the sliding surface to suit the sealing component used.

DESIGN NOTES

Please observe our general design notes.

Tolerance recommendation

Nominal Ø d	D
30 ... 100	H8

The tolerance for the Ø d is defined by the buffer seal.

Lead-in chamfers

Length and angle are to be designed to suit the rod seal used.

FITTING & INSTALLATION

Merkel Wiper AUPS wipers are pressed into axially open housings.
Careful fitting is a prerequisite for the correct function of the wiper.

MERKEL WIPER AUAS

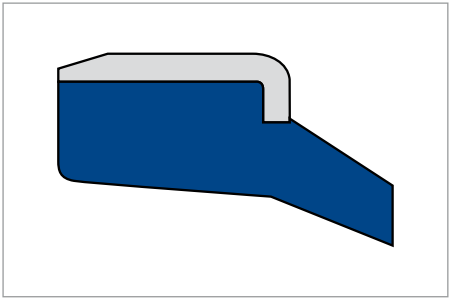

Merkel Wiper AUAS

PRODUCT DESCRIPTION

Dirt wiper with metal housing, wiper lip protruding with sharp, punched sealing edge.

PRODUCT ADVANTAGES

Single-acting wiper for the protection of cylinders against ingress of dirt, use in standardised housings, amongst others, according to ISO 6195 Type B

- Secure seating in housing (press fitting)
- No open ring gap to the outside (dirt pocket) between rod and wiper housing
- No pressure build-up between wiper and seal
- Axially open, easy to manufacture housing

As a preference, we recommend the use of the more modern type AUAS R. The wiper lip with a radius reliably wipes away dirt and simultaneously leaves a residual film of oil on the retracting rod; friction behaviour, tightness and service life of the whole system are further improved.

APPLICATION

Earth moving equipment, agricultural machinery, loading platforms, support cylinders, industrial vehicles, cranes, presses.

MATERIAL

Material	Code	Hardness	Metal housing
Polyurethane	94 AU 925	94 Shore A	unalloyed steel DIN 1624

OPERATING CONDITIONS

Material	94 AU 925
	Temperature range in °C
Hydraulic oils HL, HLP	−30 ... +110
HFA fluids	+5 ... +50
HFB fluids	+5 ... +50
HFC fluids	−30 ... +40
HFD fluids	–
Water	+5 ... +40

Material	94 AU 925
	Temperature range in °C
HETG (rapeseed oil)	−30 ... +60
HEES (synthetic esters)	−30 ... +80
HEPG (glycol)	−30 ... +40
Mineral greases	−30 ... +110
Running speed v in m/s	2

Surface quality

Surface roughness	R_a	R_{max}
Sliding surface	*	*
Groove base	≤1,6 µm	≤6,3 µm
Side of groove	≤3,0 µm	≤15,0 µm

* Surface roughness of the sliding surface to suit the sealing component used.

DESIGN NOTES

Please observe our general design notes.

Tolerance recommendation

Nominal Ø d	D
10 ... 260	H8

The tolerance for the Ø d is defined by the buffer seal.

Lead-in chamfers

Length and angle are to be designed to suit the rod seal used.

FITTING & INSTALLATION

The Merkel Wiper AUAS is pressed into axially open housings.
Careful fitting is a prerequisite for the correct function of the wiper.

MERKEL WIPER AUAS R

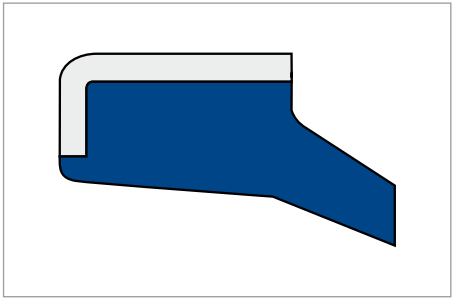

Merkel Wiper AUAS R („Radius“)

PRODUCT DESCRIPTION

Dirt wiper with metal housing, wiper lip protruding; AUAS with slightly rounded sealing edge.

PRODUCT ADVANTAGES

Single-acting wiper for the protection of cylinders against ingress of dirt, use in standardised housings, amongst others, according to ISO 6195 Type B

- Secure seating in housing (press fitting)

No open ring gap to the outside (dirt pocket) between rod and wiper housing

- No pressure build-up between wiper and seal
- Axially open, easy to manufacture housing

As a preference, we recommend the use of the modern type AUAS R. The wiper lip with a radius reliably wipes away dirt and simultaneously leaves a residual film of oil on the retracting rod; friction behaviour, tightness and service life of the whole system are further improved.

APPLICATION

Earth moving equipment, agricultural machinery, loading platforms, support cylinders, industrial vehicles, cranes, presses.

MATERIAL

Material	Code	Hardness	Metal housing
Polyurethane	94 AU 925	94 Shore A	unalloyed steel DIN 1624

OPERATING CONDITIONS

Material	94 AU 925
	Temperature range in °C
Hydraulic oils HL, HLP	−30 ... +110
HFA fluids	+5 ... +50
HFB fluids	+5 ... +50
HFC fluids	−30 ... +40
HFD fluids	–
Water	+5 ... +40
HETG (rapeseed oil)	−30 ... +60
HEES (synthetic esters)	−30 ... +80
HEPG (glycol)	−30 ... +40
Mineral greases	−30 ... +110
Running speed v in m/s	2

Surface quality

Surface roughness	R_a	R_{max}
Sliding surface	*	*
Groove base	≤1,6 µm	≤6,3 µm
Side of groove	≤3,0 µm	≤15,0 µm

* Surface roughness of the sliding surface to suit the sealing component used.

DESIGN NOTES

Please observe our general design notes.

Tolerance recommendation

Nominal Ø d	D
10 ... 260	H8

The tolerance for the Ø d is defined by the buffer seal.

Lead-in chamfers

Length and angle are to be designed to suit the rod seal used.

FITTING & INSTALLATION

The Merkel Wiper AUAS R is pressed into axially open housings.
Careful fitting is a prerequisite for the correct function of the wiper.

MERKEL WIPER AUASOB

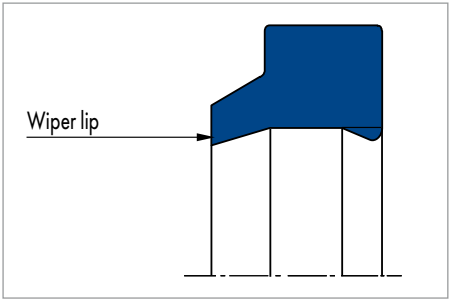

Merkel Wiper AUASOB

PRODUCT DESCRIPTION

Dirt wiper without metal reinforcement, protruding wiper lip and base face support.

PRODUCT ADVANTAGES

Single-acting wiper for the protection of cylinders against ingress of dirt, use in standardised housings according to ISO 6195 Type A.

APPLICATION

Standard cylinders.

MATERIAL

Material	Code	Hardness
Polyurethane	94 AU 925	94 Shore A

OPERATING CONDITIONS

Material	94 AU 925
	Temperature range in °C
Hydraulic oils HL, HLP	−30 ... +110
HFA fluids	+5 ... +50
HFB fluids	+5 ... +50
HFC fluids	−30 ... +40
HFD fluids	–
Water	+5 ... +40
HETG (rapeseed oil)	−30 ... +60
HEES (synthetic esters)	−30 ... +80
HEPG (glycol)	−30 ... +50
Mineral greases	−30 ... +110
Running speed v in m/s	2

Surface quality

Surface roughness	R_a	R_{max}
Sliding surface	*	*
Groove base	≤1,6 µm	≤6,3 µm
Side of groove	≤3,0 µm	≤15,0 µm

* Surface roughness of the sliding surface to suit the sealing component used.

DESIGN NOTES

Please observe our general design notes.

FITTING & INSTALLATION

Careful fitting is a prerequisite for the correct function of the wiper.
Merkel Wiper AUASOB can be quickly and easily fitted by deforming into a kidney shape.

MERKEL WIPER P 6

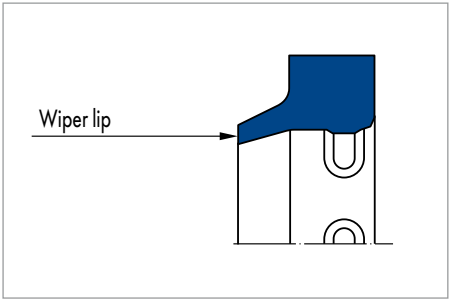

Merkel Wiper P 6

PRODUCT DESCRIPTION

Single-acting elastomeric dirt wiper with bearing segments.

PRODUCT ADVANTAGES

NBR dirt wiper that is primarily used for large diameters

- Good seating at the outside diameter
- Very good wiping action
- Wiper can be used for a wide temperature range
- No twisting in the housing and no pressure build-up between seal and wiper.

APPLICATION

Steel hydraulics engineering, mills, presses.

MATERIAL

Material	Code	Hardness
Nitrile rubber NBR	85 NBR B247	85 Shore A
Fluoro rubber FKM	85 FKM K664	85 Shore A

OPERATING CONDITIONS

Material	85 NBR B247	85 FKM K664
	Temperature range in °C	
Hydraulic oils HL, HLP	−30 ... +100	−10 ... +200
HFA fluids	+5 ... +60	+5 ... +60
HFB fluids	+5 ... +60	+5 ... +60
HFC fluids	−30 ... +60	–
HFD fluids	–	−10 ... +200
Water	+5 ... +100	+5 ... +80
HETG (rapeseed oil)	−30 ... +80	−10 ... +80
HEES (synthetic esters)	−30 ... +80	−10 ... +100
HEPG (glycol)	−30 ... +60	−10 ... +80
Mineral greases	−30 ... +100	−10 ... +200
Running speed v in m/s	2	

Surface quality

Surface roughness	R_a	R_{max}
Sliding surface	*	*
Groove base	≤1,6 µm	≤6,3 µm
Side of groove	≤3,0 µm	≤15,0 µm

* Surface roughness of the sliding surface to suit the sealing component used.

DESIGN NOTES

Please observe our general design notes.

Tolerance recommendation

Nominal Ø d	D	D_1
20 ... 2900	H10	H11

The tolerance for the Ø d is defined by the buffer seal.

Lead-in chamfers

Length and angle are to be designed to suit the rod seal used.

FITTING & INSTALLATION

Careful fitting is a prerequisite for the correct function of the Merkel Wiper P 6.
Generally, wipers can be quickly and easily fitted by deforming into a kidney shape.

MERKEL WIPER PU 5

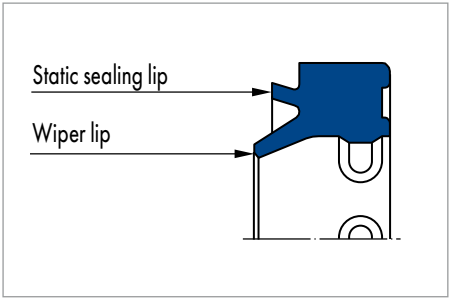

Merkel Wiper PU 5

PRODUCT ADVANTAGES

Single-acting wiper, use also in standardised housings according to ISO 6195 Type A

- Additional static sealing lip prevents ingress of dirt and water spray
- Wiper lip with slightly rounded sealing edge reliably wipes dirt away and leaves a residual oil film on the retracting rod; friction behaviour and service life are improved
- The support on the wiper heel prevents twisting in the groove as well as pressure build-up between wiper and seal.

PRODUCT DESCRIPTION

Dirt wiper with additional static sealing lip and bearing segments; sealing edge of wiper lip slightly rounded.

APPLICATION

Earth moving equipment, agricultural machinery, injection moulding machines, telescopic cylinders, presses, industrial vehicles, cranes, mining, loading platforms, support cylinders.

MATERIAL

Material	Code	Hardness
Polyurethane	95 AU V149	95 Shore A

OPERATING CONDITIONS

Material	95 AU V149
	Temperature range in °C
Hydraulic oils HL, HLP	−30 ... +110
HFA fluids	+5 ... +50
HFB fluids	+5 ... +50
HFC fluids	−30 ... +40
HFD fluids	–
Water	+5 ... +50

Material	95 AU V149
	Temperature range in °C
HETG (rapeseed oil)	−30 ... +60
HEES (synthetic esters)	−30 ... +80
HEPG (glycol)	−30 ... +50
Mineral greases	−30 ... +110
Running speed v in m/s	2

Surface quality

Surface roughness	R_a	R_{max}
Sliding surface	*	*
Groove base	≤1,6 µm	≤6,3 µm
Side of groove	≤3,0 µm	≤15,0 µm

* Surface roughness of the sliding surface to suit the sealing component used.

DESIGN NOTES

Please observe our general design notes.

Tolerance recommendation

Nominal Ø d	D	D_1
16 ... 200	H11	H11

The tolerance for the Ø d is defined by the buffer seal.

Lead-in chamfers

Length and angle are to be designed to suit the rod seal used.

FITTING & INSTALLATION

Careful fitting is a prerequisite for the correct function of the Merkel Wiper PU 5.
Generally, wipers can be quickly and easily fitted by deforming into a kidney shape.

MERKEL WIPER PU 6

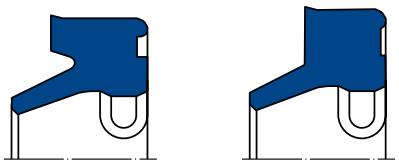

Merkel Wiper PU 6

PRODUCT DESCRIPTION

Single-acting PUR wiper with static sealing edge on the outside diameter.

PRODUCT ADVANTAGES

Dirt wiper with bearing segments on the heel of the wiper and lightly rounded wiper lip

- No ingress of dirt and water spray via outside
- diameter
- Reliably wipes away dirt
- Leaves a residual film of oil on retracting rod
- No twisting and pressure build-up between seal and wiper
- Highly wear-resistant.

APPLICATION

Earth moving equipment, presses, mining, injection moulding machines, support cylinders.

MATERIAL

Material	Code	Hardness
Polyurethane	95 AU V149	95 Shore A

OPERATING CONDITIONS

Material	95 AU V149
	Temperature range in °C
Hydraulic oils HL, HLP	−30 ... +110
HFA fluids	+5 ... +50
HFB fluids	+5 ... +50
HFC fluids	−30 ... +40
HFD fluids	–
Water	+5 ... +50

Material	95 AU V149
	Temperature range in °C
HETG (rapeseed oil)	−30 ... +60
HEES (synthetic esters)	−30 ... +80
HEPG (glycol)	−30 ... +50
Mineral greases	−30 ... +110
Running speed v in m/s	2

Surface quality

Surface roughness	R_a	R_{max}
Sliding surface	*	*
Groove base	≤1,6 µm	≤6,3 µm
Side of groove	≤3,0 µm	≤15,0 µm

* Surface roughness of the sliding surface to suit the sealing component used.

DESIGN NOTES

Please observe our general design notes.

Tolerance recommendation

Nominal Ø d	D	D_1
12 ... 200	H10	H11

The tolerance for the Ø d is defined by the buffer seal.

Lead-in chamfers

Length and angle are to be designed to suit the rod seal used.

FITTING & INSTALLATION

Careful fitting is a prerequisite for the correct function of the Merkel Wiper PU 6.
Generally, wipers can be quickly and easily fitted by deforming into a kidney shape.

MERKEL WIPER PU 7

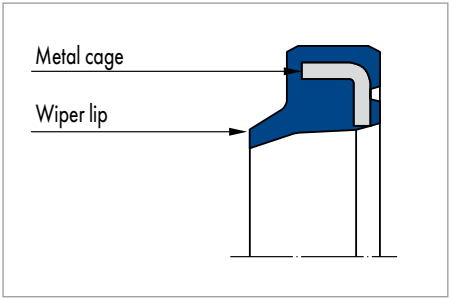

Merkel Wiper PU 7

PRODUCT DESCRIPTION

Single-acting dirt wiper made of polyurethane with integrated metal cage.

PRODUCT ADVANTAGES

PUR wiper for axially accessible housings, amongst others, for standardised housings according to ISO 6195 Type B.

- Secure seating in housing (press fitting)
- Made of highly wear-resistant polyurethane
- No open ring gap to the outside (dirt pocket) between rod and housing
- Easy to manufacture housing
- No corrosion between housing and wiper cage.

APPLICATION

Earth moving equipment, industrial vehicles, presses, mining, injection moulding machines, support cylinders, agricultural machinery, cranes, loading platforms, telescopic cylinders.

MATERIAL

Material	Code	Hardness
Polyurethane	95 AU V149	95 Shore A

OPERATING CONDITIONS

Material	95 AU V149
	Temperature range in °C
Hydraulic oils HL, HLP	−30 ... +110
HFA fluids	+5 ... +50
HFB fluids	+5 ... +50
HFC fluids	−30 ... +40
HFD fluids	–
Water	+5 ... +50

Material	95 AU V149
	Temperature range in °C
HETG (rapeseed oil)	−30 ... +60
HEES (synthetic esters)	−30 ... +80
HEPG (glycol)	−30 ... +50
Mineral greases	−30 ... +110
Running speed v in m/s	2

Surface quality

Surface roughness	R_a	R_{max}
Sliding surface	*	*
Groove base	≤1,6 µm	≤6,3 µm
Side of groove	≤3,0 µm	≤15,0 µm

* Surface roughness of the sliding surface to suit the sealing component used.

DESIGN NOTES

Please observe our general design notes.

Tolerance recommendation

Nominal Ø d	D
10 ... 150	H8

The tolerance for the Ø d is defined by the buffer seal.

Lead-in chamfers

Length and angle are to be designed to suit the rod seal used.

FITTING & INSTALLATION

Careful fitting is a prerequisite for the correct function of the Merkel Wiper PU 7.
Generally, wipers can be quickly and easily fitted by deforming into a kidney shape.

MERKEL DOUBLE WIPER P 8

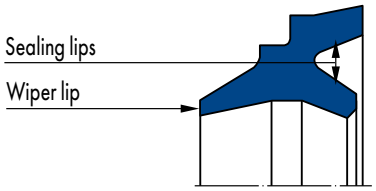

Merkel Double Wiper P 8

MATERIAL

D <200 mm

Material	Code	Hardness
Nitrile rubber NBR	90 NBR 109	90 Shore A

D >200 mm

Material	Code	Hardness
Fluoro rubber FKM	85 NBR B247	85 Shore A

PRODUCT DESCRIPTION

Elastomer double wiper.

PRODUCT ADVANTAGES

The Merkel Double Wiper P 8 exerts inwards the wiping function of a U-ring, and a wiping action outwards against soiling

- Strong wiping action against dirt
- Very good sealing effect against residual film of oil on the extending rod
- Wear-resistant.

APPLICATION

Industrial vehicles, injection moulding machines, presses. Merkel Double Wipers P 8 are preferably fitted in combination with our rod sealing systems Merkel Omegat OMS-MR and Merkel Omegat OMS-S. We recommend in any case the provision of a pressure relieving bore in front of the double wiper in order to avoid a pressure build-up between seal and wiper.

OPERATING CONDITIONS

Material	90 NBR B283/ 85 NBR B247/ 90 NBR 109
	Temperature range in °C
Hydraulic oils HL, HLP	−30 ... +100
HFA fluids	+5 ... +60
HFB fluids	+5 ... +60
HFC fluids	−30 ... +60
HFD fluids	–
Water	+5 ... +100
HETG (rapeseed oil)	−30 ... +80
HEES (synthetic esters)	−30 ... +80
HEPG (glycol)	−30 ... +60
Mineral greases	−30 ... +100
Running speed v in m/s	1

Surface quality

Surface roughness	R_a	R_{max}
Sliding surface	*	*
Groove base	≤1,6 µm	≤6,3 µm
Side of groove	≤3,0 µm	≤15,0 µm

* Surface roughness of the sliding surface to suit the sealing component used.

DESIGN NOTES

Please observe our general design notes.

Tolerance recommendation

Nominal Ø d	D	D_1	D_2
16 ... 1000	H10	JS11	H10

The tolerance for the Ø d is defined by the buffer seal.

Lead-in chamfers

Length and angle are to be designed to suit the rod seal used.

FITTING & INSTALLATION

Careful fitting is a prerequisite for the correct function of the Merkel Double Wiper P 8.
Generally, wipers can be quickly and easily fitted by deforming into a kidney shape.

MERKEL DOUBLE WIPER P 9

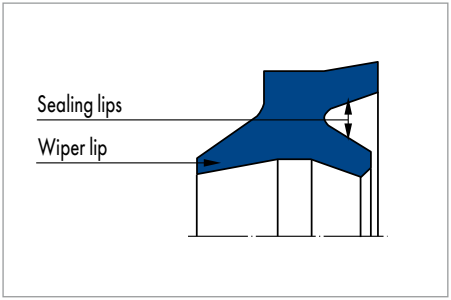

Merkel Double Wiper P 9

PRODUCT DESCRIPTION

Elastomer double wiper especially for large diameters.

PRODUCT ADVANTAGES

The Merkel Double Wiper P 9 exerts inwards the wiping function of a U-ring, and a wiping action outwards against soiling

- Intermediate sizes without mould/tool possible
- Strong wiping action against dirt
- Very good sealing effect against residual film of oil on the extending rod
- Wear-resistant.

APPLICATION

Injection moulding machines, presses, large standard cylinders. The Merkel Double Wiper P 9 is preferably fitted in combination with our rod sealing systems. We recommend in any case the provision of a pressure relieving bore in front of the double wiper in order to avoid a pressure build-up between seal and wiper.

MATERIAL

Material	Code	Hardness
Nitrile rubber NBR	85 NBR B247	85 Shore A

OPERATING CONDITIONS

Material	85 NBR B247
	Temperature range in °C
Hydraulic oils HL, HLP	−30 ... +100
HFA fluids	+5 ... +60
HFB fluids	+5 ... +60
HFC fluids	−30 ... +60
HFD fluids	–
Water	+5 ... +100

Material	85 NBR B247
	Temperature range in °C
HETG (rapeseed oil)	−30 ... +80
HEES (synthetic esters)	−30 ... +80
HEPG (glycol)	−30 ... +60
Mineral greases	−30 ... +100
Running speed v in m/s	1

Surface quality

Surface roughness	R_a	R_{max}
Sliding surface	*	*
Groove base	≤1,6 µm	≤6,3 µm
Side of groove	≤3,0 µm	≤15,0 µm

* Surface roughness of the sliding surface to suit the sealing component used.

DESIGN NOTES

Please observe our general design notes.

Tolerance recommendation

Nominal Ø d	D	D_1
16 ... 2000	H10	+0,2

The tolerance for the Ø d is defined by the buffer seal.

Lead-in chamfers

Length and angle are to be designed to suit the rod seal used.

FITTING & INSTALLATION

Careful fitting is a prerequisite for the correct function of the Merkel Double Wiper P 9.
Generally, wipers can be quickly and easily fitted by deforming into a kidney shape.

MERKEL DOUBLE WIPER PRW 1 WITH INTEGRATED PRESSURE RELIEF

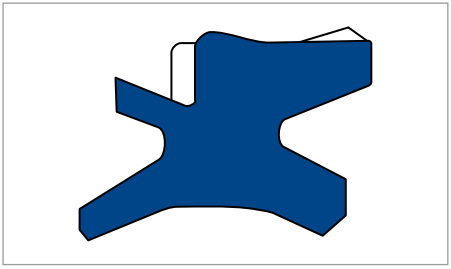

Merkel Double Wiper PRW 1

PRODUCT DESCRIPTION

Merkel Double Wiper PRW 1 with integrated pressure-relief function and special sealing and wiping edge geometry.

PRODUCT ADVANTAGES

Double wiper for housings based on ISO 6195 Type A

- No pressure build-up between wiper and rod seal due to integrated pressure relief (patented).
- Improved sealing of overall system due to dynamic sealing lip with punched sealing edge.
- Wiping lip has outstanding wiping action against dirt
- Static sealing lip for additional protection against ingress of dirt and water.

APPLICATION

Earth moving equipment, industrial vehicles, loading platforms, agricultural machinery, cranes, support cylinders.

MATERIAL

Material	Code	Hardness
Polyurethane	94 AU 925	94 Shore A
Polyurethane	92 AU 21100	92 Shore A

OPERATING CONDITIONS

Material	94 AU 925	92 AU 21100
	Temperature range in °C	
Hydraulic oils HL, HLP	−30 ... +110	−40 ... +100
HFA fluids	+5 ... +50	+5 ... +50
HFB fluids	+5 ... +50	+5 ... +50
HFC fluids	−30 ... +40	−40 ... +40
HFD fluids	–	–
Water	+5 ... +40	+5 ... +40

Material	94 AU 925	92 AU 21100
	Temperature range in °C	
HETG (rapeseed oil)	−30 ... +60	−40 ... +60
HEES (synthetic esters)	−30 ... +80	−40 ... +80
HEPG (glycol)	−30 ... +40	−40 ... +40
Mineral greases	−30 ... +110	−40 ... +100
Running speed v in m/s	0,6	0,6

Surface quality

Surface roughness	R_a	R_{max}
Sliding surface	0,05 ... 0,3 µm	≤2,5 µm
Groove base	≤1,6 µm	≤6,3 µm
Side of groove	≤3,0 µm	≤15,0 µm

Percentage contact area M_r >50% up to max. 90% at cutting depth c = Rz/2 and reference line C ref = 0%.

DESIGN NOTES

Please observe our general design notes.

Gap dimension

The largest gap dimension occurring on the non-pressurised side of the seal in operation is of vital importance for the function of the seal.

Profile dimension	Max. permissible gap dimension		
	16 MPa	26 MPa	32 MPa
4,0 ... 5,0	0,50	0,40	0,35
>5,0 ... 7,5	0,55	0,45	0,40

Tolerance recommendation and dimension D2

During the design of D2, the admissible gap width, tolerances, guide play and deflection of the guide under load are to be taken into consideration.

Nominal Ø d	d	D
≤180	f8	H11

FITTING & INSTALLATION

Careful fitting is a prerequisite for the correct function of the Merkel Double Wiper PRW 1.
Generally, wipers can be quickly and easily fitted by deforming into a kidney shape.

MERKEL DOUBLE WIPER PT 1

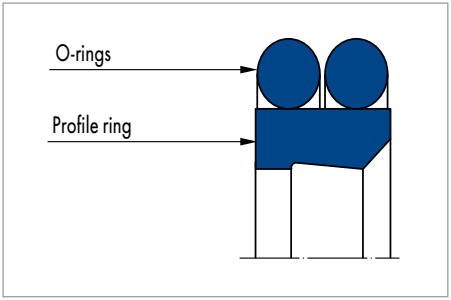

Merkel Double Wiper PT 1

PRODUCT DESCRIPTION

Merkel Double Wiper PT 1 consisting of one profile ring made of PTFE with a sealing edge and a wiper edge, as well as two O-rings as sealing and pre-load components.

PRODUCT ADVANTAGES

Double wiper for improvement of total tightness. Merkel Double Wiper PT 1 is preferably fitted in combination with our rod seals Merkel Omegat OMS-MR, Merkel Compact Seal T 20 or Merkel U-Ring LF 300

- Low friction, free of stick-slip
- Excellent regulation and positioning in operation
- Material variants for short stroke and high frequency; available on enquiry
- High reliability, can accept the full operating pressure for short periods.

We recommend a pressure relieving bore. With buffer seals with good deformation value, pressure relief is not necessary. In any case, on the combination of seals without sufficient deformation value, e.g. Merkel Compact Seal NI 300, KI 310 and KI 320, a pressure relieving bore is required.

APPLICATION

Industrial vehicles, injection moulding machines, handling equipment, presses, agricultural machinery, mills, control and regulation equipment, large cylinders.

MATERIAL

Profile ring

Material	Code
PTFE bronze compound	PTFE B602
PTFE glass/MoS2 compound	PTFE GM201

O-ring

Material	Code	Hardness
Nitrile rubber NBR	NBR	70 Shore A
Fluoro rubber	FKM	70 Shore A

OPERATING CONDITIONS

Material	PTFE B602/NBR	PTFE B602/FKM	PTFE GM201/NBR	PTFE GM201/FKM
	Temperature range in °C			
Hydraulic oils HL, HLP	−30 ... +100	−10 ... +200	−30 ... +100	−10 ... +150
HFA fluids	–	–	+5 ... +60	+5 ... +60
HFB fluids	–	–	+5 ... +60	+5 ... +60
HFC fluids	–	–	−30 ... +60	−10 ... +40
HFD fluids	–	−10 ... +20	–	−10 ... +150
Water	–	–	+5 ... +100	+5 ... +100
HETG (rapeseed oil)	−30 ... +80	−10 ... +80	−30 ... +80	−10 ... +80
HEES (synthetic esters)	−30 ... +80	−10 ... +100	−30 ... +60	−10 ... +100
HEPG (glycol)	−30 ... +60	−10 ... +80	−30 ... +60	−10 ... +80
Mineral greases	−30 ... +100	−10 ... +200	−30 ... +100	−10 ... +150
Running speed v in m/s	5			

Surface quality

Surface roughness	R_a	R_{max}
Sliding surface	*	*
Groove base	≤1,6 µm	≤6,3 µm
Side of groove	≤3,0 µm	≤15,0 µm

* Surface roughness of the sliding surface to suit the sealing component used.

DESIGN NOTES

Please observe our general design notes in.

Tolerance recommendation

Nominal Ø d	D	D_1
20 ... 800	H9	H10

The tolerance for the Ø d is defined by the buffer seal.

Lead-in chamfers

Length and angle are to be designed to suit the rod seal used.

FITTING & INSTALLATION

Careful fitting is a prerequisite for the correct function of the Merkel Double Wiper PT 1.
Generally, wipers can be quickly and easily fitted by deforming into a kidney shape.

MERKEL DOUBLE WIPER PT 2

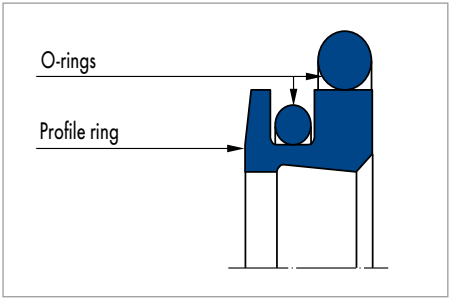

Merkel Double Wiper PT 2

PRODUCT DESCRIPTION

Merkel Double Wiper PT 2 consisting of one profile ring made from PTFE with a sealing edge and a wiper edge, as well as two O-rings as sealing and pre-load components.

PRODUCT ADVANTAGES

Double wiper for improvement of total tightness. The Merkel Double Wiper PT 2 is mainly fitted in combination with our rod seals Merkel Omegat OMS-S. A pressure relieving bore is to be provided between seal and wiper

- Excellent regulation and positioning in operation
- Low friction, free of stick-slip
- Material variants for short stroke and high frequency; available on enquiry
- Especially suitable for large diameters.

APPLICATION

Injection moulding machines, presses, mills, steel hydraulics engineering.

MATERIAL

Profile ring

Material	Code
PTFE bronze compound	PTFE B602

O-ring

Material	Code	Hardness
Nitrile rubber NBR	NBR	70 Shore A
Fluoro rubber	FKM	70 Shore A

OPERATING CONDITIONS

Material	85 NBR B247	85 FKM K664
	Temperature range in °C	
Hydraulic oils HL, HLP	−30 ... +100	−10 ... +200
HFA fluids	–	–
HFB fluids	–	–
HFC fluids	–	–
HFD fluids	–	−10 ... +200
Water	–	–
HETG (rapeseed oil)	−30 ... +80	−10 ... +80
HEES (synthetic esters)	−30 ... +80	−10 ... +100
HEPG (glycol)	−30 ... +60	−10 ... +80
Mineral greases	−30 ... +100	−10 ... +200
Running speed v in m/s	5	

Surface quality

Surface roughness	R_a	R_{max}
Sliding surface	*	*
Groove base	≤1,6 µm	≤6,3 µm
Side of groove	≤3,0 µm	≤15,0 µm

* Surface roughness of the sliding surface to suit the sealing component used.

DESIGN NOTES

Please observe our general design notes.

Tolerance recommendation

Nominal Ø d	D	D_1
100 ... 1200	H8	H8

The tolerance for the Ø d is defined by the buffer seal.

Lead-in chamfers

Length and angle are to be designed to suit the rod seal used.

FITTING & INSTALLATION

Careful fitting is a prerequisite for the correct function of the Merkel Double Wiper PT 2.
Generally, wipers can be quickly and easily fitted by deforming into a kidney shape.
For diameters from >100 mm to 150 mm, a fitting tool is required. Under 100 mm, no fitting in plunge-cut groove is possible.

MERKEL DOUBLE WIPER PU 11

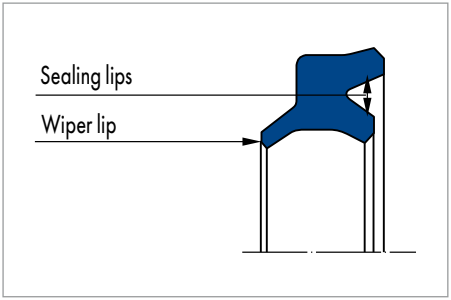

Merkel Double Wiper PU 11

PRODUCT DESCRIPTION

U-ring with wiper lip (double-lip wiper); sealing edge of wiper lip lightly rounded.

PRODUCT ADVANTAGES

Double wiper for improvement of total tightness; dimensions also for standardised housing according to ISO 6195 Type C

- Sealing lips pointing inwards fulfil the function of a U-ring
- Wiper lip with lightly rounded sealing edge reliably wipes away dirt and leaves a residual oil film on the retracting rod
- Tightness, service life and friction behaviour of the entire system are improved.

Merkel Double Wiper PU 11 can take pressures up to 1,6 MPa. If higher pressures can build, up we recommend a pressure relieving bore between seal and wiper.

APPLICATION

Industrial vehicles, injection moulding machines, standard cylinders.

MATERIAL

Material	Code	Hardness
Polyurethane	95 AU V142	95 Shore A

OPERATING CONDITIONS

Material	95 AU V142
	Temperature range in °C
Hydraulic oils HL, HLP	−30 ... +110
HFA fluids	+5 ... +50
HFB fluids	+5 ... +50
HFC fluids	−30 ... +40
HFD fluids	–
Water	+5 ... +50
HETG (rapeseed oil)	−30 ... +60
HEES (synthetic esters)	−30 ... +80
HEPG (glycol)	−30 ... +50
Mineral greases	−30 ... +110
Running speed v in m/s	1

Surface quality

Surface roughness	R_a	R_{max}
Sliding surface	*	*
Groove base	≤1,6 µm	≤6,3 µm
Groove flanks	≤3,0 µm	≤15,0 µm

* Surface roughness of the sliding surface to suit the sealing component used.

DESIGN NOTES

Please observe our general design notes.

Tolerance recommendation

Nominal Ø d	D	D_1
12 ... 200	H11	H11

The tolerance for the Ø d is defined by the buffer seal.

Lead-in chamfers

Length and angle are to be designed to suit the rod seal used.

FITTING & INSTALLATION

Careful fitting is a prerequisite for the correct function of the Merkel Double Wiper PU 11.
Generally, wipers can be quickly and easily fitted by deforming into a kidney shape.

PRE-SELECTION HYDRAULICS – GUIDES

Temperature figures refer to mineral oils. Due to the large choice of media with different and varying additives, which is not always easily comprehensible, the above operating limits are only recommended values. We recommend testing resistance in the specific case.
Individual instances of the operating limits stated may be exceeded taking into account the related operating conditions. With a long duty cycle, stop-start operation or other difficult operating conditions it is recommended that these values are not simultaneously exploited to the full.

Seal		Standard		
Type	Material	DIN/ISO	Examples of use	
SB 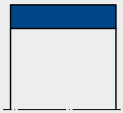	Hard fabric	10766	High load-bearing capacity, universally applicable.	
KB 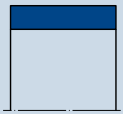	Hard fabric	10766	High load-bearing capacity, universally applicable.	
SF 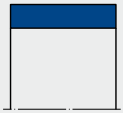	PTFE bronze	10766	Free of stick-slip, good damping and emergency running characteristics.	
KF 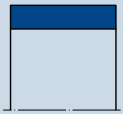	PTFE bronze	10766	Free of stick-slip, good damping and emergency running characteristics.	

● = very good; ◑ = good; ○ = possibile or satisfactory; ⊗ = not suitable

	Function					Operating Limits		
	single-acting	double-acting	Individual seal	Primary seal	Secondary seal	Pressure (MPa)	Speed (m/s)	Temperature (°C)
					<50 N/mm² at 60 °C		1	−40 ... +120
					<50 N/mm² at 60 °C		1	−40 ... +120
					<15 N/mm² at 20 °C		5	−40 ... +200
					<15 N/mm² at 20 °C		5	−40 ... +200

Seal		Standard		
Type	**Material**	**DIN/ISO**	**Examples of use**	
Guivex SBK 	Hard fabric	10766	Patented geometry for an even distribution of stress, reduced total friction and wear, space-saving and cost-effective design possible.	
Guivex KBK 	Hard fabric	10766	Patented geometry for an even distribution of stress, reduced total friction and wear, space-saving and cost-effective design possible.	
FRI 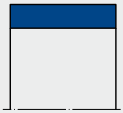	Polyamide	10766	For loads up to 40 N/mm².	
FRA 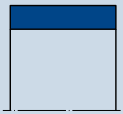	Polyamide	10766	For loads up to 40 N/mm².	

● = very good; ◑ = good; ○ = possibile or satisfactory; ⊗ = not suitable

	Function					Operating Limits		
	single-acting	double-acting	Individual seal	Primary seal	Secondary seal	Pressure (MPa)	Speed (m/s)	Temperature (°C)
					<60 N/mm² at 120 °C		1	−40 ... +120
					<60 N/mm² at 120 °C		1	−40 ... +120
					<40 N/mm² at 20 °C		1	−30 ... +100
					<40 N/mm² at 20 °C		1	−30 ... +100

MERKEL GUIDE RING EKF

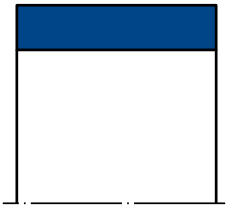

Merkel Guide Ring EKF

PRODUCT DESCRIPTION

Slit, non-metallic Merkel Guide Ring EKF.

PRODUCT ADVANTAGES

Non-metallic guide element for pistons.

APPLICATION

Standard cylinders, mobile hydraulics, injection moulding machines.

MATERIAL

Material	Code
Polyamide	PA 4201

OPERATING CONDITIONS

Material	PA 4201
	Temperature range in °C
Hydraulic oils HL, HLP	−30 ... +100
HFA fluids	+5 ... +50
HFB fluids	+5 ... +50
HFC fluids	−30 ... +50
HFD fluids	–
Water	+5 ... +50
HETG (rapeseed oil)	−30 ... +60
HEES (synthetic ester)	−30 ... +80
HEPG (glycol)	−30 ... +50
Mineral greases	−30 ... +100
Running speed v in m/s	1
Loading (permitted specific surface pressure*)	≤25 N/mm² bei 20 °C ≤15 N/mm² bei 100 °C

* For the simple determination of the loading, a constant surface pressure is calculated using the projected area (D x H). The actual surface pressure is clearly greater in the centre of the surface than the calculated surface pressure. This is taken into account in the value for the permissible specific surface pressure.

Surface quality

Surface roughness	R_a	R_{max}
Sliding surface	0,05 ... 0,3 µm	≤2,5 µm
Groove base	≤2 µm	≤10,0 µm
Groove flanks	≤3 µm	≤15,0 µm

Percentage contact area M_r >50% to max. 90% at cutting depth c = Rz/2 and reference line C ref = 0%.

DESIGN NOTES

Please observe our general design notes

Tolerance recommendation

D_1	d_F	d_{F1}
H8	h8	h9

The tolerances give are recommended values. The usage of the guide and tolerance definition are to be considered in connection with the seal employed. The diameter d_{F1} given in the table of dimensions is to be considered exclusively in relation to the guide ring. The corresponding diameter for the adjacent seal housing is to be matched to the sealing component.

FITTING & INSTALLATION

Merkel Guide Ring EKF can be easily snapped into the housing groove.
Careful fitting is a prerequisite for correct function.

MERKEL GUIDE RING FRA

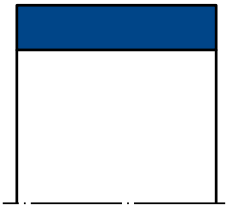

Merkel Guide Ring FRA

PRODUCT DESCRIPTION

Slit, non-metallic Merkel Guide Ring FRA.

PRODUCT ADVANTAGES

As a non-metallic guide element for pistons, for standardised housings, amongst others, according to ISO 10766

- No seizure due to metal/plastic materials combination
- Medium load-bearing capacity
- Chamfered profile edges prevent pressing of edge into the corner radii of the housing groove
- Simple snap-in fitting.

APPLICATION

Earth moving equipment, industrial vehicles, agricultural machinery, cranes.

MATERIAL

Material	Code
Filled polyamide	PA 4112

OPERATING CONDITIONS

Material	PA 4112 (filled polyamide)
	Temperature range in °C
Hydraulic oils HL, HLP	−30 ... +100
HFA fluids	+5 ... +50
HFB fluids	+5 ... +50
HFC fluids	−30 ... +50
HFD fluids	–
Water	+5 ... +50
HETG (rapeseed oil)	−30 ... +60
HEES (synthetic esters)	−30 ... +80
HEPG (glycol)	−30 ... +50
Mineral greases	−30 ... +100
Running speed in m/s	1
Load (permitted specific surface pressure*)	≤40 N/mm² bei 20 °C ≤30 N/mm² bei 100 °C

* For the simple determination of the load, a constant surface pressure is calculated using the projected area (D x H). The actual surface pressure is clearly greater in the centre of the surface than the calculated surface pressure. This is taken into account in the value for the permissible specific surface pressure.

Surface quality

Surface roughness	R_a	R_{max}
Sliding surface	0,05 ... 0,3 µm	≤2,5 µm
Groove base	≤2 µm	≤10,0 µm
Groove flanks	≤3 µm	≤15,0 µm

Percentage contact area M_r >50% to max. 90% at cutting depth c = Rz/2 and reference line C ref = 0%.

DESIGN NOTES

Please observe our general design notes.

Tolerance recommendation

D	d_F	d_{F1}
H8	h8	h9

The tolerances give are recommended values. The usage of the guide and tolerance definition are to be considered in relation to the seal employed. The diameter d_{F1} given in the table of dimensions is to be considered exclusively in connection with the guide ring. The corresponding diameter for the adjacent seal housing is to be matched to the sealing component.

Manufacturing tolerance

D	Production tolerance profile thickness S
≤120	−0,1
>120	−0,15

FITTING & INSTALLATION

Merkel Guide Ring FRA can be easily snapped into the housing groove.
Careful fitting is a prerequisite for correct function.

MERKEL GUIDE RING KB

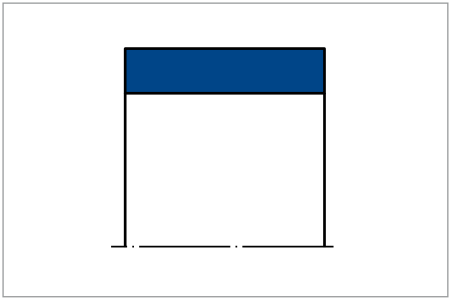

Merkel Guide Ring KB

PRODUCT DESCRIPTION

Non-metallic Merkel Guide Ring KB.

PRODUCT ADVANTAGES

Non-metallic guide element for pistons, also for standardised housings according to ISO 10766

- Metal/fabric-base laminate materials combination prevents "seizing"
- High load-bearing capacity, elastic (not plastic) behaviour up to break point
- Chamfered profile edges prevent pressing of edge into the corner radii of the housing groove
- Simple snap-in fitting (d ≤300).

APPLICATION

Earth moving equipment, agricultural machinery, injection moulding machines, loading platforms, support cylinders, industrial vehicles, cranes, presses, steel hydraulics engineering.

MATERIAL

Slotted Ring ≤300

Material	Code
Fabric-base laminate	HGW HG517

Ready to fit strip cut to size >300

Material	Code
Fabric-base laminate	HGW HG600

OPERATING CONDITIONS

Material	HGW HG517/ HGW HG600
	Temperature range in °C
Hydraulic oils HL, HLP	−40 ... +120
HFA fluids	+5 ... +60
HFB fluids	+5 ... +60
HFC fluids	−40 ... +60
HFD fluids	−40 ... +120
Water	+5 ... +60
HETG (rapeseed oil)	−40 ... +80
HEES (synthetic ester)	−40 ... +100
HEPG (glycol)	−40 ... +80
Mineral greases	−40 ... +120

Surface quality

Surface roughness	R_a	R_{max}
Sliding surface	0,05 ... 0,3 µm	≤2,5 µm
Groove base	≤2 µm	≤10,0 µm
Groove flanks	≤3 µm	≤15,0 µm

Percentage contact area M_r >50% up to max. 90% at cutting depth c = Rz/2 and reference line C ref = 0%.

DESIGN NOTES

Please observe our general design notes.

Tolerance recommendation

d_1
H8

The tolerance definition for the dimensions D and d_1 must be viewed in relation to the seal used. The diameter D_1 specified in the table of dimensions is to is to be viewed exclusively in connection with the guide ring. The corresponding diameter of an adjacent seal housing should match the sealing component.

Manufacturing tolerance

Profile thickness S
−0,02 ... −0,08

Surface load

Profile thickness S
p <50 N/mm² up to 60 °C
p <25 N/mm² up to 100 °C

For running speed, see sealing system.

Surface force

The pressure distribution on the guide rings is non-linear. The non-linear pressure curve over the contact range was taken into account when calculating the permissible specific surface pressure. The permissible load on the guide strip is calculated by multiplying the projected area with the permissible specific surface pressure. However, the figure for the permissible specific surface pressure takes into account the possible angular offset of the piston when using the recommended guide elements.

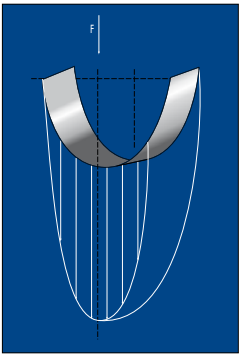

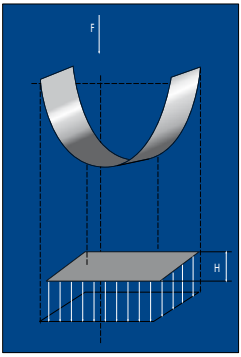

F = P x A
H = F / (d x P)

H = guide strip width [mm]
F = radial load [N]
A = projected area [mm²]
P = perm. compression per unit area [N/mm²]
d = rod diameter with rod guidance; piston diameter with piston guidance [mm].

MERKEL GUIDE RING GUIVEX KBK

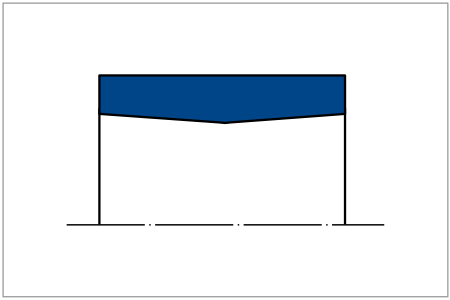

Merkel Guide Ring Guivex KBK

PRODUCT DESCRIPTION

Profiled Merkel Guide Ring Guivex KBK made from fabric-base laminate. Patented product design (patent-no.: PCT/EP95/03874).

PRODUCT ADVANTAGES

Merkel KBK guide rings offer clear advantages over conventional guide strips/rings, designed for standardised housings according to ISO 10766 amongst others

- Interchangeable to existing operating environments of the types SB and SF
- High radial load
- Very good utilisation of the guide length through even distribution of stress
- Improved drawing-in of lubricating medium through optimised distribution of stress in the contact zone between guide bush and counter-acting surface
- Reduced stick-slip tendency
- Outstanding running behaviour with short guide distances (no clamping).

APPLICATION

Long stroke cylinders (piston rod bowing under load), short guide distances (lateral buckling of the piston rod), short stroke (inadequate lubrication) friction-optimised sealing systems, additional item for metal guides, mobile hydraulics, heavy-duty hydraulics.

MATERIAL

Ø range ≤300

Material	Code	Colour
Fabric-base laminate	HGW HG517	Dark grey
Fabric-base laminate	HGW HG650	Red

Ø range >300

Material	Code	Colour
Fabric-base laminate	HGW HG650	Red

OPERATING CONDITIONS

Material	HGW HG517/ HGW HG650
	Temperature range in °C
Hydraulic oils HL, HLP	−40 ... +120
HFA fluids	+5 ... +60
HFB fluids	+5 ... +60
HFC fluids	−40 ... +60
HFD fluids	−40 ... +120
Water	+5 ... +60
HETG (rapeseed oil)	−40 ... +80
HEES (synthetic esters)	−40 ... +100
HEPG (glycol)	−40 ... +80
Mineral greases	−40 ... +120

Surface quality

Surface roughness	R_a	R_{max}
Sliding surface	0,05 ... 0,3 µm	≤2,5 µm
Groove base	≤1,6 µm	≤6,3 µm
Groove flanks	≤3,0 µm	≤15,0 µm

ercentage contact area M_r >50% to max. 90% at cutting depth c = Rz/2 and reference line C ref = 0%.

The long-term behaviour of the sealing component as well as the security against early failures are primarily determined by the quality of the counter-acting surface. This means that the surface must be precisely described and evaluated. Based on current knowledge we recommend supplementing the above definition of the surface quality of the sliding surface with the quantities in the following table. The previous general description of the material component is significantly improved with the new quantities from the material component, particularly with reference to the abrasiveness of the surface.

DESIGN NOTES

The diameter D_1 given in the table of dimensions is to be considered exclusively in relation to the guide ring. The corresponding diameter for the adjacent seal housing is to be matched to the sealing component.

Sliding surfaces

Characteristic value	Limit position
R_a	>0,05 mm ... 0,30 mm
R_{max}	<2,50 mm
R_{pkx}	<0,50 mm
R_{pk}	<0,50 mm
R_k	>0,25 mm ... 0,70 mm
R_{vk}	>0,20 mm ... 0,65 mm
R_{vkx}	>0,20 mm ... 2,00 mm

The limit values listed in the table are not currently applicable for ceramic or partial ceramic counter-surfaces.

Tolerance

Production tolerance profile thickness S
−0,01 ... −0,06

Surface load

The value for the specific compression per unit area is dependent on the operating temperature and the size of the elastic deformation (deflection) of the guide element. The maximum possible deflection is limited in a sealing system by the smallest gap dimension behind the primary seal.

Deflection

e1 = 0,10 for s = 2,5
e1 = 0,15 for s = 4,0
e2 = 0,15 for s = 2,5
e2 = 0,20 for s = 4,0

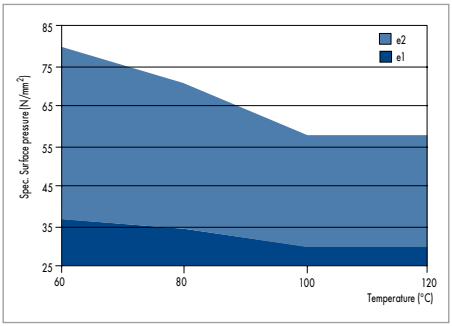

Special surface pressure for parallel load

Radial load

The pressure distribution on the guide rings is non-linear. The non-linear pressure curve over the contact range was taken into account when calculating the permissible specific surface pressure. The required guide width can be calculated using the following formulas. Taking the increased service life into consideration, a reduction of the load by selection of a wide guide can make sense in individual cases.

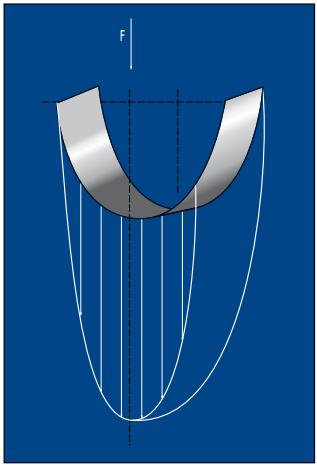

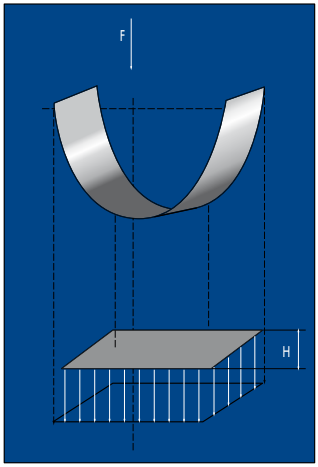

F = P x A
H = F / (d x P)

H = guide strip width [mm]
F = radial load [N]
A = projected area [mm²]

P = perm. compression per unit area [N/mm²]
d = rod diameter with rod guidance; piston diameter with piston guidance [mm].

Mode of operation

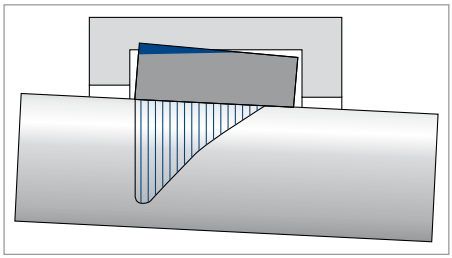

Rectangular guide ring: stress peaks in the edge area

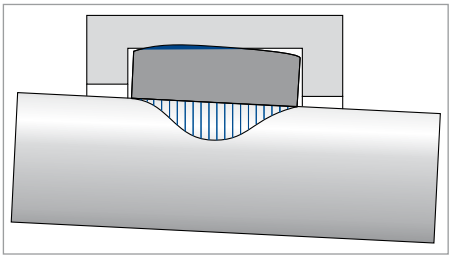

Merkel Guide Ring Guivex KBK: even distribution of stress

MERKEL GUIDE STRIP KF

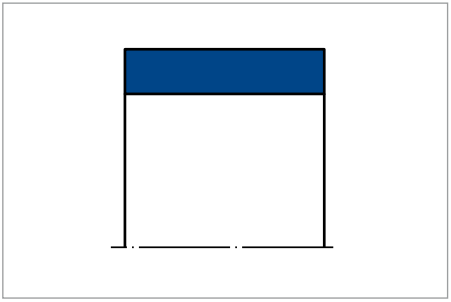

Merkel Guide Strip KF

PRODUCT DESCRIPTION

Non-metallic Merkel Guide Strip KF, available ready to fit cut to size or by the metre.

PRODUCT ADVANTAGES

Non-metallic guide element for pistons, also for standardised housings as per ISO 10766

- Low friction, free of stick-slip.

APPLICATION

Injection moulding machines, control and regulation equipment, handling equipment.

MATERIAL

Material	Code
PTFE bronze compound	PTFE B500

OPERATING CONDITIONS

Material	PTFE B500
	Temperature range in °C
Hydraulic oils HL, HLP	−40 ... +200
HFA fluids	–
HFB fluids	–
HFC fluids	–
HFD fluids	−40 ... +200
Water	–
HETG (rapeseed oil)	−40 ... +80
HEES (synthetic esters)	−40 ... +100
HEPG (glycol)	−40 ... +80
Mineral greases	−40 ... +200

Surface quality

Surface roughness	R_a	R_{max}
Sliding surface	0,05 ... 0,3 µm	≤2,5 µm
Groove base	≤2 µm	≤10,0 µm
Groove flanks	≤3 µm	≤15,0 µm

Percentage contact area M_r >50% to max. 90% at cutting depth c = Rz/2 and reference line C ref = 0%.

DESIGN NOTES

Please observe our general design notes.

Calculating straight length L2

L2	Production tolerances
>20 ... 80	... 0,5
>80 ... 250	... 1,0
>250 ... 500	... 1,5
>500 ... 1000	... 2,0
>1000 ... 2000	... 3,0
>2000 ... 4000	... 4,0

Tolerance recommendation

d_1
h8

The tolerance definition for the dimensions D and d_F must be viewed in connection with the seal used. The diameter D_1 specified in the table of dimensions is to is to be viewed exclusively in relation to the guide ring. The corresponding diameter of an adjoining seal housing should be tailored to the sealing component.

Manufacturing tolerance

Production tolerance profile thickness S
–0,05

Surface load

p <15 N/mm² up to 20 °C
p <7,5 N/mm² up to 80 °C
p <5 N/mm² up to 120 °C

For running speed, see sealing system.

Cutting rolls to size

The following dimensions are available from stock by the metre. The straight length L2 of blanks is to be determined using the formula. The gap k produced after fitting is necessary due to thermal expansion. We recommend a straight cut on the strips. On impact at an angle the tips may be damaged and break-off. Our cutter (Article No. 507228) facilitates time-saving and accurate cutting to size.

Calculating stretched length L2 for rods:
L2 = (D – S) x 3,11 – 0,5

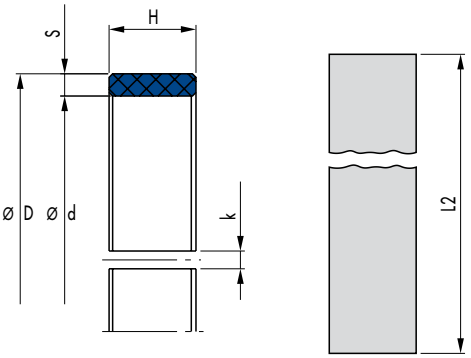

Groove length L	Profile thickness S	Article No.
8	2,5	24226174
9,7	2,5	24102775
10	2,5	24102563
12	2,5	24099191
15	2,5	24102564
20	2,5	24076217
25	2,5	24107955
15	4,0	24160019
20	4,0	24238052
25	4,0	24148093

Surface force

The pressure distribution on the guide rings is non-linear. The non-linear pressure curve over the contact range was taken into account when calculating the permissible specific surface pressure. The permissible load on the guide strip is calculated by multiplying the projected area with the permissible specific surface pressure. However, the figure for the permissible specific surface pressure takes into account the possible angular offset of the piston when the recommended guide elements are used.

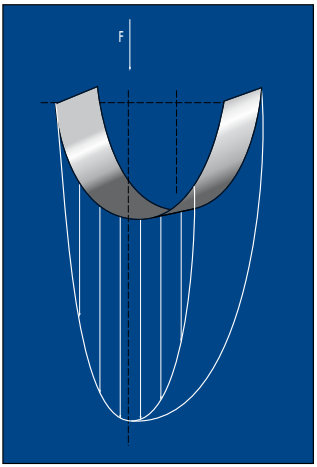

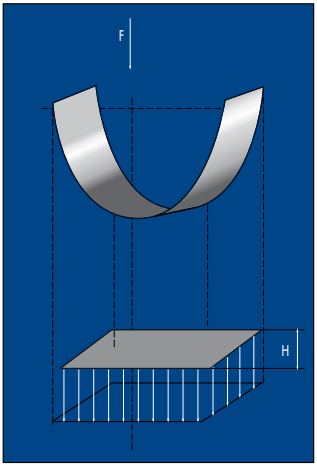

F = P x A
H = F / (d x P)

H = guide strip width [mm]
F = radial loading [N]
A = projected area [mm²]
P = perm. compression per unit area [N/mm²]
d = rod diameter with rod guidance; piston diameter with piston guidance [mm].

MERKEL GUIDE RING FRI

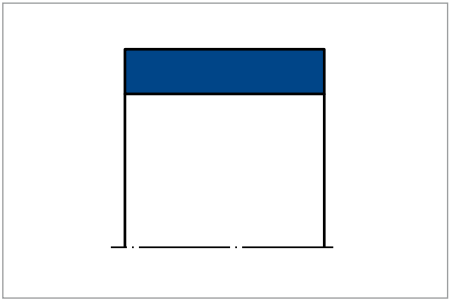

Merkel Guide Ring FRI

PRODUCT DESCRIPTION

Slit, non-metallic Merkel Guide Ring FRI.

PRODUCT ADVANTAGES

Non-metallic guide element for rods; for standardised housings amongst others, according to ISO 10766

- No seizure due to metal/plastic materials combination
- Medium load-bearing capacity
- Chamfered profile edges prevent pressing of edge into the corner radii of the housing groove
- Simple snap-in fitting.

APPLICATION

Earth moving equipment, industrial vehicles, agricultural machinery, cranes.

MATERIAL

Material	Code
Filled polyamide	PA 4112

OPERATING CONDITIONS

Material	PA 4112 (filled polyamide)
	Temperature range in °C
Hydraulic oils HL, HLP	−30 ... +100
HFA fluids	+5 ... +50
HFB fluids	+5 ... +50
HFC fluids	−30 ... +50
HFD fluids	–
Water	+5 ... +50
HETG (rapeseed oil)	−30 ... +60
HEES (synthetic ester)	−30 ... +80
HEPG (glycol)	−30 ... +50
Mineral greases	−30 ... +100
Running speed in m/s	1
Load (permitted specific surface pressure*)	≤40 N/mm² bei 20 °C ≤30 N/mm² bei 100 °C

* For the simple determination of the load, a constant surface pressure is calculated using the projected area (d x H). The actual surface pressure is clearly greater in the centre of the surface than the calculated surface pressure. This is taken into account in the value for the permissible specific surface pressure.

Surface quality

Surface roughness	R_a	R_{max}
Sliding surface	0,05 ... 0,3 µm	≤2,5 µm
Groove base	≤2 µm	≤10,0 µm
Groove flanks	≤3 µm	≤15,0 µm

Percentage contact area M_r >50% to max. 90% at cutting depth c = Rz/2 and reference line C ref = 0%.

DESIGN NOTES

Please observe our general design notes.

Tolerance recommendation

d	D_F	D_{F1}
f8	H8	H9

The tolerances give are recommended values. The usage of the guide and tolerance definition are to be considered in connection with the seal employed. The diameter D_{F1} given in the table of dimensions is to be considered exclusively in relation to the guide ring. The corresponding diameter for the adjacent seal housing is to be matched to the sealing component.

Manufacturing tolerance

Production tolerance profile thickness S
−0,1

FITTING & INSTALLATION

Merkel Guide Ring FRI can be easily snapped into the housing groove.
Careful fitting is a prerequisite for correct function.

MERKEL GUIDE RING GUIVEX SBK

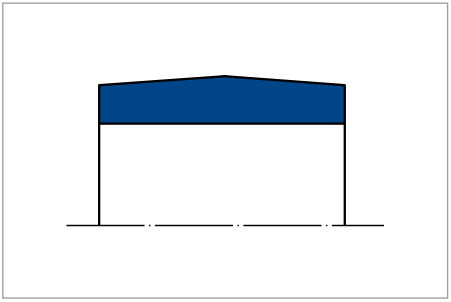

Merkel Guide Ring Guivex SBK

PRODUCT DESCRIPTION

Profiled Merkel Guide Ring Guivex SBK made from fabric-base laminate. Patented product design (patent-no.: PCT/EP95/03874).

PRODUCT ADVANTAGES

Merkel SBK guide rings offer clear advantages over conventional guide strips/rings, designed for standardised housings according to ISO 10766 amongst others

- Interchangeable to existing operating environments of the types SB and SF
- High radial load
- Very good utilisation of the guide length through even distribution of stress
- Improved drawing-in of lubricating medium through optimised distribution of stress in the contact zone between guide ring and counter-acting surface
- Reduced stick-slip tendency
- Outstanding running behaviour with short guide distances (no clamping).

APPLICATION

Long stroke cylinders (piston rod bowing under load), short guide distances (lateral buckling of the piston rod), short stroke (inadequate lubrication) friction-optimised sealing systems, additional item for metal guides, mobile hydraulics, heavy-duty hydraulics.

MATERIAL

Ø range ≤300

Material	Code	Colour
Fabric-base laminate	HGW HG517	Dark grey
Fabric-base laminate	HGW HG650	Red

Ø range >300

Material	Code	Colour
Fabric-base laminate	HGW HG650	Red

OPERATING CONDITIONS

Material	HGW HG517/ HGW HG650
	Temperature range in °C
Hydraulic oils HL, HLP	−40 ... +120
HFA fluids	+5 ... +60
HFB fluids	+5 ... +60
HFC fluids	−40 ... +60
HFD fluids	−40 ... +120
Water	+5 ... +60
HETG (rapeseed oil)	−40 ... +80
HEES (synthetic ester)	−40 ... +100
HEPG (glycol)	−40 ... +80
Mineral greases	−40 ... +120

Surface quality

Surface roughness	R_a	R_{max}
Sliding surface	0,05 ... 0,3 µm	≤2,5 µm
Groove base	≤1,6 µm	≤6,3 µm
Groove flanks	≤3,0 µm	≤15,0 µm

Percentage contact area M_r >50% to max. 90% at cutting depth c = Rz/2 and reference line C ref = 0%.

The long-term behaviour of the sealing component as well as the security against early failures are primarily determined by the quality of the counter-acting surface. This means that the surface must be precisely described and evaluated. Based on current knowledge we recommend supplementing the above definition of the surface quality of the sliding surface with the quantities in the following table. The previous general description of the material component is significantly improved with the new quantities from the material component, particularly with reference to the abrasiveness of the surface.

DESIGN NOTES

The diameter D1 given in the table of dimensions is to be considered exclusively in relation to the guide bush. The corresponding diameter for the adjacent seal housing is to be matched to the sealing component.

Sliding surfaces

Characteristic value	Limit position
R_a	>0,05 mm ... 0,30 mm
R_{max}	<2,50 mm
R_{pkx}	<0,50 mm
R_{pk}	<0,50 mm
R_k	>0,25 mm ... 0,70 mm
R_{vk}	>0,20 mm ... 0,65 mm
R_{vkx}	>0,20 mm ... 2,00 mm

The limit values listed in the table are not currently applicable for ceramic or partial ceramic counter-surfaces.

Tolerance

Production tolerance profile thickness S
−0,01 ... −0,06

Surface load

The value for the specific compression per unit area is dependent on the operating temperature and the size of the elastic deformation (deflection) of the guide element. The maximum possible deflection is limited in a sealing system by the smallest gap dimension behind the primary seal.

Deflection

e1 = 0,10 for s = 2,5
e1 = 0,15 for s = 4,0
e2 = 0,15 for s = 2,5
e2 = 0,20 for s = 4,0

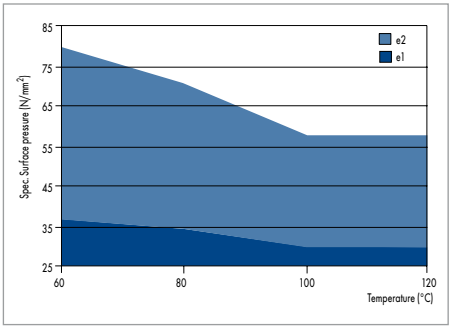

Special surface pressure for parallel load

Radial load

The pressure distribution on the guide rings is non-linear. The non-linear pressure curve over the contact range was taken into account when calculating the permissible specific surface pressure. The required guide width can be calculated using the following formulas. Taking the increased service life into consideration, a reduction of the load by selection of a wide guide can make sense in individual cases.

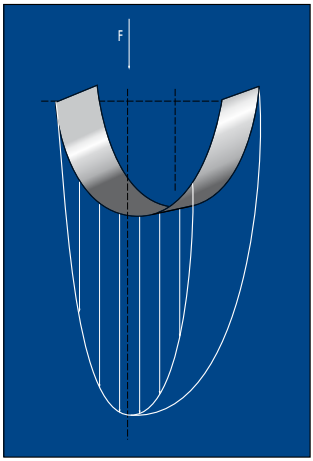

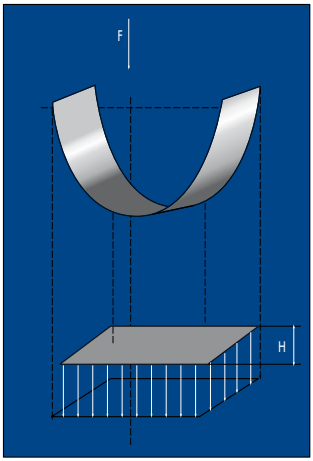

F = P x A
H = F / (d x P)

H = guide strip width [mm]
F = radial load [N]
A = projected area [mm²]

P = perm. compression per unit area [N/mm²]
d = rod diameter with rod guidance; piston diameter with piston guidance [mm].

Mode of operation

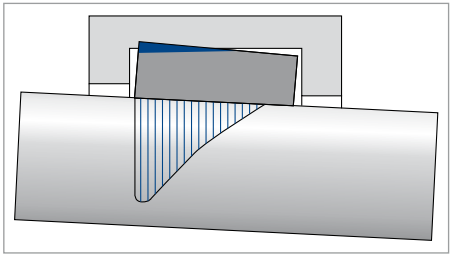

Rectangular guide ring: stress peaks in the edge area

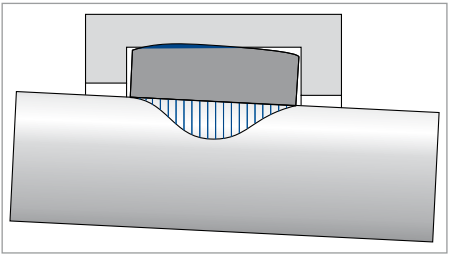

Merkel Guide Ring Guivex SBK: even distribution of stress

MERKEL GUIDE RING SB

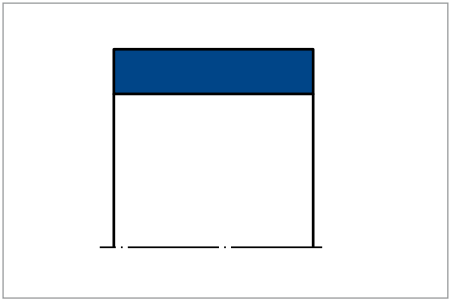

Merkel Guide Ring SB

PRODUCT DESCRIPTION

Non-metallic Merkel Rod Guide Ring SB.

PRODUCT ADVANTAGES

As a non-metallic guide element for rods, also for standardised housings according to ISO 10766

- Metal/fabric-base laminate materials combination prevents "seizing"
- High load-bearing capacity, elastic (not plastic) behaviour up to break point
- Chamfered profile edges prevent pressing of edge into the corner radii of the housing groove
- Simple snap-in fitting (d ≤300).

APPLICATION

Earth moving equipment, industrial vehicles, agricultural machinery, cranes, injection moulding machines, loading platforms, steel hydraulics engineering, presses, support cylinders.

MATERIAL

Slotted ring ≤300

Material	Code
Fabric-base laminate	HGW HG517
Fabric-base laminate	HGW HG650

Ready to fit strip cut to size >300

Material	Code
Fabric-base laminate	HGW HG600

OPERATING CONDITIONS

Material	HGW HG517/ HGW HG600
	Temperature range in °C
Hydraulic oils HL, HLP	−40 ... +120
HFA fluids	+5 ... +60
HFB fluids	+5 ... +60
HFC fluids	−40 ... +60
HFD fluids	−40 ... +120
Water	+5 ... +60
HETG (rapeseed oil)	−40 ... +80
HEES (synthetic esters)	−40 ... +100
HEPG (glycol)	−40 ... +80
Mineral greases	−40 ... +120

Surface quality

Surface roughness	R_a	R_{max}
Sliding surface	0,05 ... 0,3 µm	≤2,5 µm
Groove base	≤2 µm	≤10,0 µm
Groove flanks	≤3 µm	≤15,0 µm

Percentage contact area M_r >50% to max. 90% at cutting depth c = Rz/2 and reference line C ref = 0%.

DESIGN NOTES

Please observe our general design notes.

Tolerance recommendation

D_1
H8

The tolerance definition for the dimensions D and d must be viewed in relation to the seal used. The diameter D_1 specified in the table of dimensions is to is to be viewed exclusively in connection with the guide ring. The corresponding diameter of an adjacent seal housing should be tailored to the sealing component.

Manufacturing tolerance

Profile thickness S
−0,02 ... −0,08

Surface load

Profile thickness S
p <50 N/mm² up to 60 °C
p <25 N/mm² up to 100 °C

For running speed, see sealing system.

Surface force

The pressure distribution on the guide rings is non-linear. The non-linear pressure curve over the contact range was taken into account when calculating the permissible specific surface pressure. The permissible load on the guide strip is calculated by multiplying the projected area with the permissible specific surface pressure. However, the figure for the permissible specific surface pressure takes into account the possible angular offset of the rods when using the recommended guide elements.

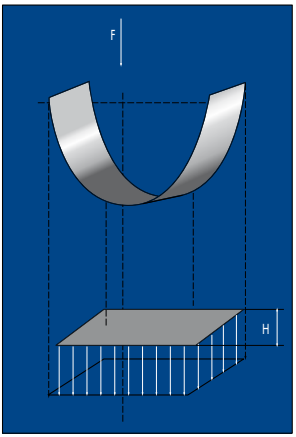

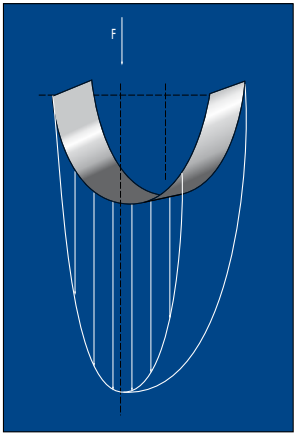

F = P x A
H = F / (d x P)

H = guide strip width [mm]
F = radial load [N]
A = projected area [mm²]
P = perm. compression per unit area [N/mm²]
d = rod diameter with rod guidance; piston diameter with piston guidance [mm].

MERKEL GUIDE STRIP SF

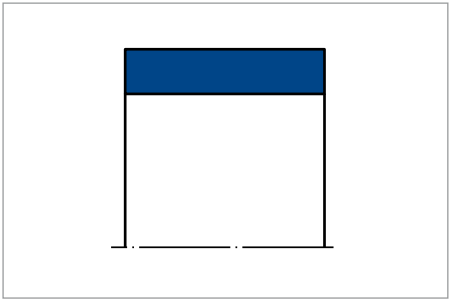

Merkel Guide Strip SF

PRODUCT DESCRIPTION

Non-metallic Merkel Guide Strip SF, available ready to fit cut to size or by the metre.

PRODUCT ADVANTAGES

As a non-metallic guide element for rods, also for standardised housings according to ISO 10766

- Low friction, free of stick-slip.

APPLICATION

Control and regulation equipment, handling equipment, injection moulding machines.

MATERIAL

Material	Code
PTFE bronze compound	PTFE B500

OPERATING CONDITIONS

Material	PTFE B500
	Temperature range in °C
Hydraulic oils HL, HLP	−40 ... +200
HFA fluids	–
HFB fluids	–
HFC fluids	–
HFD fluids	−40 ... +200
Water	–
HETG (rapeseed oil)	−40 ... +80
HEES (synthetic esters)	−40 ... +100
HEPG (glycol)	−40 ... +80
Mineral greases	−40 ... +200

Surface quality

Surface roughness	R_a	R_{max}
Sliding surface	0,05 ... 0,3 µm	≤2,5 µm
Groove base	≤2 µm	≤10,0 µm
Side of groove	≤3 µm	≤15,0 µm

Percentage contact area M_r >50% to max. 90% at cutting depth c = Rz/2 and reference line C ref = 0%.

DESIGN NOTES

Please observe our general design notes

Calculating straight length L2

L2	Production tolerances
>20 ... 80	... 0,5
>80 ... 250	... 1,0
>250 ... 500	... 1,5
>500 ... 1000	... 2,0
>1000 ... 2000	... 3,0
>2000 ... 4000	... 4,0

Tolerance recommendation

D_1
H8

The tolerance definition for the dimensions D and d_F must be viewed in connection with the seal used. The diameter d_1 specified in the table of dimensions is to is to be viewed exclusively in relation to the guide ring. The corresponding diameter of an adjacent seal housing should be tailored to the sealing component.

Manufacturing tolerance

Production tolerance profile thickness S
−0,05

Surface load

p <15 N/mm² up to 20 °C
p <7,5 N/mm² up to 80 °C
p <5 N/mm² up to 120 °C

For running speed, see sealing system.

Cutting rolls to size

The following dimensions are available from stock by the metre. The straight length L2 of blanks is to be determined using the formula. The gap k produced after fitting is necessary due to thermal expansion. We recommend a straight cut on the strips. In the event of butt joints the tips may be damaged and break-off. Our cutter (Article No. 507228) facilitates time-saving and accurate cutting to size.

Calculation of the straight length L2 for rods:

L2 = (d + S) x 3,11 − 0,5

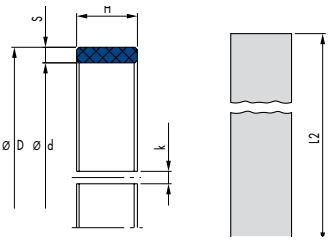

Groove length L	Profile thickness S	Article No.
8	2,5	24226174
9,7	2,5	24102775
10	2,5	24102563
12	2,5	24099191
15	2,5	24102564
20	2,5	24076217

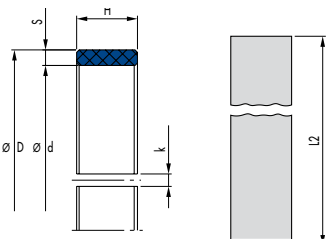

Groove length L	Profile thickness S	Article No.
25	2,5	24107955
15	4,0	24160019
20	4,0	24238052
25	4,0	24148093

Surface force

The pressure distribution on the guide rings is non-linear. The non-linear pressure curve over the contact range was taken into account when calculating the permissible specific surface pressure. The permissible load on the guide strip is calculated by multiplying the projected surface with the permissible specific surface pressure. However, the figure for the permissible specific surface pressure takes into account the possible angular offset of the rods when the recommended guide elements are used.

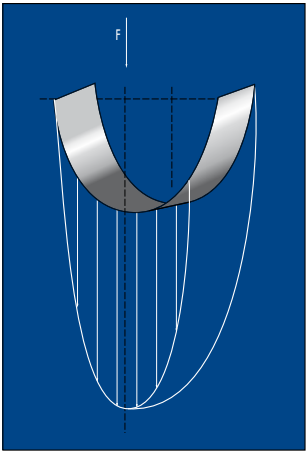

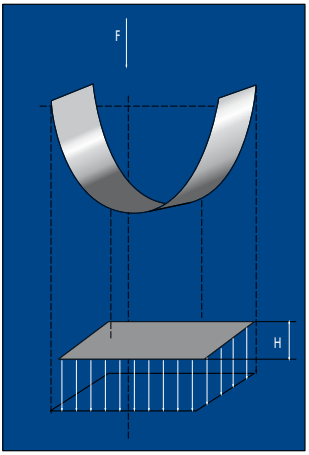

F = P x A
H = F / (d x P)

H = guide strip width [mm]
F = radial loading [N]
A = projected area [mm²]

P = perm. compression per unit area [N/mm²]
d = rod diameter with rod guidance; piston diameter with piston guidance [mm].

PROFILES FOR OSCILLATING APPLICATIONS

PRODUCT OVERVIEW

- Profiles
  - U-rings
  - Mating rings for U-rings
  - Other special profiles
- Cords
  - Cord
  - Cord rings.

PRODUCT DESCRIPTION

Special profiles or cords are utilised whenever large sealing contact areas cannot be effectively sealed by form seals or O-rings, for example, in tunnelling machines, ships engines and hatchways. Over 3500 different profile nozzles as well as numerous materials area available. In addition, the development and production of customer-specific designs is possible, where the tool costs are very low compared to shape related components.

PRODUCT ADVANTAGES

- Sealing large seal contact areas that cannot be sealed by an O-ring or a shape related component
- Customer-specific product
- development
- Low tool costs in comparison to shape related components
- Proprietary tool construction to ensure short supply times
- All common elastomers can be utilised
- Special materials competency
- Low number of pieces/amounts possible
- Profile rings in NBR and FKM are available with vulcanisation to butt. Advantages of batch vulcanisation:
  - Peak tensile strength values
  - Identical elastomer as connecting element provides long-lasting durability.

APPLICATION

Components manufactured from profiles perform sealing tasks in numerous industrial sectors.

- Heavy-duty mechanical engineering, e.g. tunnel driving technology, cement/rock mills
- Plant engineering, e.g. turbines, shut-off valves, process cylinders
- Prime movers, e.g. ships' engines
- Separators, e.g. filtering technology, large separators
- Mechanical engineering, e.g. industrial washing machines, rotating assemblies
- Chemical industry, e.g. bins/reaction vessels, dosing units/dosing pumps
- Medical technology, e.g. diagnostic equipment components, dosing units
- Foodstuffs industry, e.g. industrial juice presses, separators, and butchering machines.

MATERIAL

Besides the common materials with shorter delivery times, numerous special materials are also offered. These feature outstanding quality and durability. In the following overview, suitable materials can be selected according to their requirements.

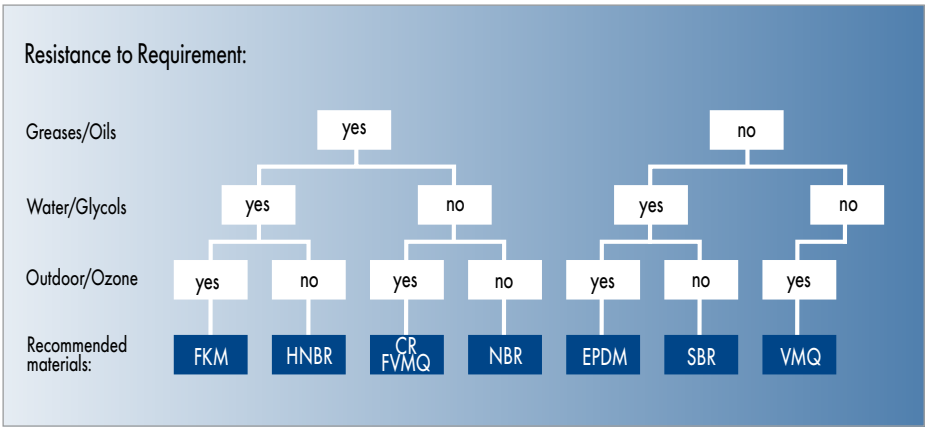

Material configuration

Material	Colour	Operating temperature range
50 NBR 121*	Black	−30 ... +90 °C
60 NBR 122	Black	−30 ... +90 °C
70 NBR 221	Black	−25 ... +90 °C
70 NBR 803	Grey	−25 ... +90 °C
70 NBR 173216	Black	−30 ... +70 °C
72 NBR 872	Black	−30 ... +100 °C
79 NBR 105	Black	−30 ... +90 °C
80 NBR 709*	Black	−30 ... +90 °C
85 NBR 714	Black	−20 ... +90 °C
88 NBR 101	Black	−30 ... +100 °C
39 CR 174240*	Grey	−40 ... +80 °C
55 CR 852	Black	−40 ... +110 °C
67 CR 853	Black	−40 ... +110 °C
67 CR 215595	Black	−40 ... +80 °C
58 EPDM 215550	Grey	−40 °C ... +120 °C
70 EPDM 275	Black	−40 °C ... +120 °C
70 FKM 598	Green	−15 °C ... +200 °C
70 FKM 215450	Black	−10 °C ... +200 °C
72 FKM 588	Black	−10 °C ... +200 °C
60 FVMQ 143026	Beige	−80 °C ... +175 °C

Material	Colour	Operating temperature range
50 VMQ 570	Beige	−40 °C ... +200 °C
50 VMQ 114721	Yellow transparent	−40 °C ... +180 °C
58 VMQ 518	Red brown	−40 °C ... +200 °C
60 VMQ 114722	Yellow transparent	−40 °C ... +180 °C
70 VMQ 114723	Yellow transparent	−40 °C ... +180 °C
78 VMQ 526	Red	−40 °C ... +200 °C

* Special material on enquiry

DESIGN NOTES

Tolerances

All profiles and cords are manufactured according to DIN ISO 3302-1 E2. In exceptional cases, production to E1 is also possible.
Limits for dimensions of cross sections of extruded components not supported (all dimensions in mm):

Nominal dimension		Tolerance class	
over	to	E1*	E2
0	1,5	0,15	0,25
1,5	2,5	0,20	0,35
2,5	4,0	0,25	0,40
4,0	6,3	0,35	0,50
6,3	10,0	0,40	0,70
10	16	0,50	0,80
16	25	0,70	1,00
25	40	0,80	1,30
40	63	1,00	1,60
63	100	1,30	2,00

* Partially possible in individual cases

U-RINGS

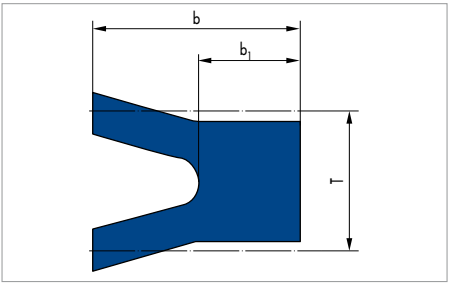

U-rings are produced, extruded and bonded to the butt for use as piston or rod seals. U-rings made of NBR and FKM are also available with vulcanisation to butt. They can be supplied at extremely short notice.

Fitting & installation

The inner diameter of the U-ring should be at least 15 times the profile cross section dimension (T).

MATING RINGS FOR U-RINGS

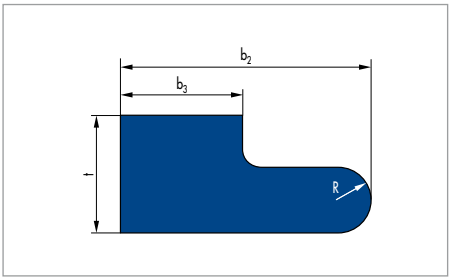

Mating rings are used for fastening and prevent axial movement of the U-rings, which can damage the sealing edges at the sealing lips. They are manufactured using extruders. The mating rings are always supplied by the metre.

Fitting Notes

During fitting, the two ends are placed flush to one another. The mating rings can be seated on the U-rings with a slight axial tension.

Operating conditions

Operating pressure: < = 10 bar
Running speed: <0,5 m/s.

OTHER SPECIAL PROFILES

Profiles can be produced and supplied as follows:

- By the metre
  - With/without integral bend
- Profile sections
  - Produced to customer requirements (up to 2000 mm without integral bend possible)
- Profile rings
  - Bonded to butt or batch vulcanised.

Profile nozzles

Below is a selection of the 3500 profile nozzles in stock.
Individual tools can be developed and produced for special designs on enquiry. This normally takes around 4 weeks.

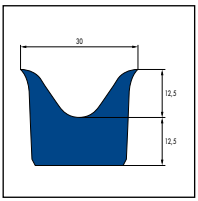

Profile 111

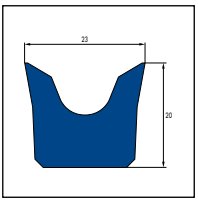

Profile 141

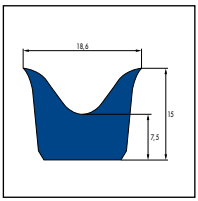

Profile 155

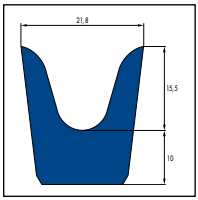

Profile 216

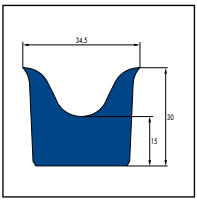

Profile 241

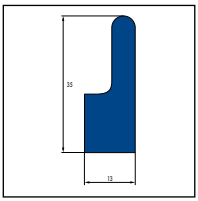

Profile 272

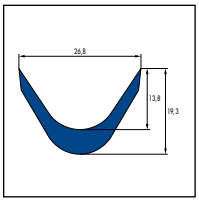

Profile 441

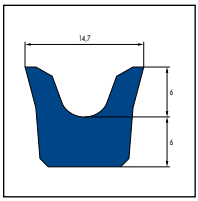

Profile 619

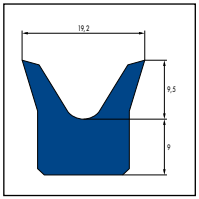

Profile 1045

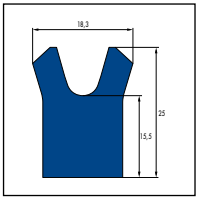

Profile 1673

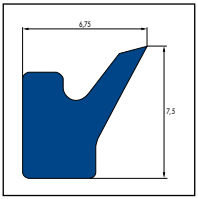

Profile 1677

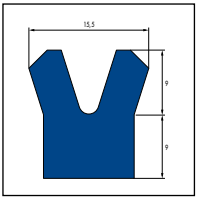

Profile 1721

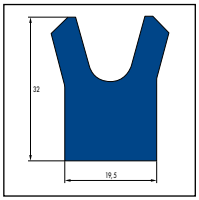

Profile 1749

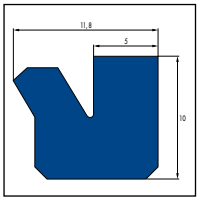

Profile 2754

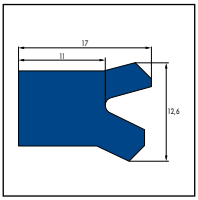

Profile 2777

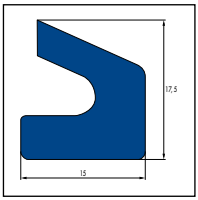

Profile 2858

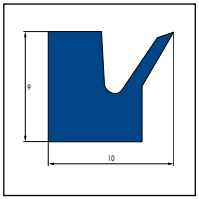

Profile 2995

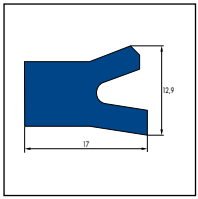

Profile 3300

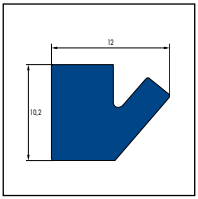

Profile 20160

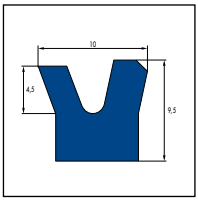

Profile 20218

PRE-SELECTION HYDRAULICS – OTHER SEALS

Temperature figures refer to mineral oils. Due to the large choice of media with different and varying additives, which is not always easily comprehensible, the above operating limits are only recommended values. We recommend testing resistance in the specific case.
Individual instances of the operating limits stated may be exceeded taking into account the related operating conditions. With a long duty cycle, stop-start operation or other difficult operating conditions it is recommended that these values are not simultaneously exploited to the full.

Seals for Swivelling Movement

Seal		Standard		
Type	Material	DIN/ISO	Examples of use	
Rotomatic M 15 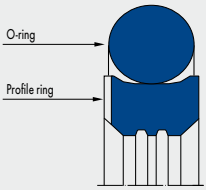	PTFE glass NBR		Compact, highly resistant to hydraulic fluids, low friction, free of stick-slip, suitable for pivoting motions.	
Rotomatic M 16 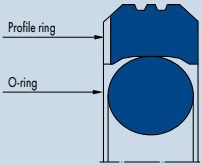	PTFE glass NBR		Compact, highly resistant to hydraulic fluids, low friction, free of stick-slip, suitable for pivoting motions.	

● = very good; ◑ = good; ○ = possibile or satisfactory; ⊗ = not suitable

	Function					Operating Limits		
	single-acting	double-acting	Individual seal	Primary seal	Secondary seal	Pressure (MPa)	Speed (m/s)	Temperature (°C)
						40	0,5	−30 ... +100
						40	0,5	−30 ... +100

Static Seals

Seal		Standard		
Type	**Material**	**DIN/ISO**	**Examples of use**	
Cover Seal PU 82 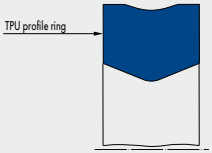	95 AU V142		Inner sealing, well suited for high pressure peaks, high gap bridging/extrusion protection, replaces O-ring/back ring variants.	
Cover Seal PU 83 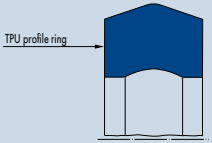	95 AU V142		Outer sealing, well suited for high pressure peaks, high gap bridging/extrusion protection, replaces O-ring/back ring variants.	
Stircomatic SRC 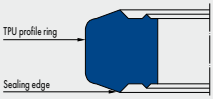	95 AU V142		Very good extrusion resist-ance, suitable for extremely high, pulsating pressure peaks, low requirements on housings.	

● = very good; ◑ = good; ○ = possibile or satisfactory; ⊗ = not suitable

	Function					Operating Limits		
	single-acting	double-acting	Individual seal	Primary seal	Secondary seal	Pressure (MPa)	Speed (m/s)	Temperature (°C)
						60		−30 ... +110
						60		−30 ... +110
						80		−30 ... +110

MERKEL ROTOMATIC M 15

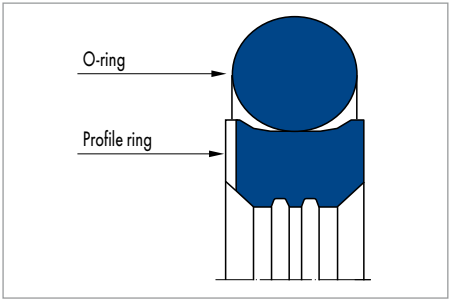

Merkel Rotomatic M 15

PRODUCT ADVANTAGES

Double-acting rod seal for pivoting motions in hydraulic systems, preferably for usage in hydraulic joints and rotary joints.

- Short
- Highly resistant to hydraulic fluids
- Low friction, free of stick-slip.

APPLICATION

Excavators, grippers, rotary joints.

PRODUCT DESCRIPTION

Two-piece Merkel seal set for sealing piston rods, consisting of one PTFE profile ring and an O-ring as a pre-load component.

MATERIAL

PTFE profile ring

Material	Code
PTFE glass/MoS_2 compound	GM201

O-ring

Material	Code	Hardness
Nitrile rubber NBR	NBR	70 Shore A
Fluoro rubber FKM	FKM	70 Shore A

OPERATING CONDITIONS

Material	80 NBR B241	80 FKM K670
	Temperature range in °C	
Hydraulic oils HL, HLP	−30 ... +100	−10 ... +150
HFA fluids	+5 ... +60	+5 ... +60
HFB fluids	+5 ... +60	+5 ... +60
HFC fluids	−30 ... +60	−10 ... +40
HFD fluids	–	−10 ... +150
Water	+5 ... +100	+5 ... +100
HETG (rapeseed oil)	−30 ... +80	−10 ... +80
HEES (synthetic esters)	−30 ... +80	−10 ... +100
HEPG (glycol)	−30 ... +60	−10 ... +80
Mineral greases	−30 ... +100	−10 ... +150
Pressure p in MPa	40	
Running speed v in m/s	0,5	

Surface quality

Surface roughness	R_a	R_{max}
Sliding surface	0,05 ... 0,3 µm	≤2,5 µm
Groove base	≤1,6 µm	≤6,3 µm
Groove flanks	≤3,0 µm	≤15,0 µm

The surface hardness must be approx. 45 to 60 HRC (depth of hardening min. 0,5 mm). Percentage contact area M_r >50% to max 90% at cutting depth c = Rz/2 and reference line C ref = 0%. Abrasive surfaces, ridges, scratches and blow-holes are to be avoided.

DESIGN NOTES

Please observe our general design notes.

MERKEL ROTOMATIC M 16

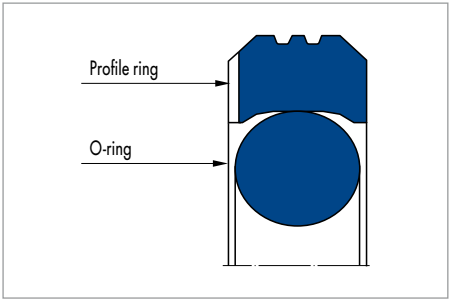

Merkel Rotomatic M 16

PRODUCT ADVANTAGES

Double-acting piston seal for pivoting motions in hydraulic systems; for standardised housing according to ISO 7425/1; preferably for usage in hydraulic joints and rotary joints.

- Short
- Highly resistant to hydraulic fluids
- Low friction, free of stick-slip.

APPLICATION

Excavators, grippers, rotary joints.

PRODUCT DESCRIPTION

Two-piece Merkel seal set for sealing pistons, consisting of one PTFE profile ring and an O-ring as a pre-load component.

MATERIAL

PTFE profile ring

Material	Code
PTFE glass/MoS_2 compound	PTFE GM201

O-ring

Material	Code	Hardness
Nitrile rubber	80 NBR B241	70 Shore A
Fluoro rubber	80 FKM K670	70 Shore A

OPERATING CONDITIONS

Material	PTFE GM201	PTFE GM201
	Temperature range in °C	
Hydraulic oils HL, HLP	−30 ... +100	−10 ... +150
HFA fluids	+5 ... +60	+5 ... +60
HFB fluids	+5 ... +60	+5 ... +60
HFC fluids	−30 ... +60	−10 ... +40
HFD fluids	–	−10 ... +150
Water	+5 ... +100	+5 ... +100

Material	PTFE GM201	PTFE GM201
	Temperature range in °C	
HETG (rapeseed oil)	−30 ... +80	−10 ... +80
HEES (synthetic esters)	−30 ... +80	−10 ... +100
HEPG (glycol)	−30 ... +60	−10 ... +80
Mineral greases	−30 ... +100	−10 ... +150
Pressure p in MPa	40	
Running speed v in m/s	0,5	

Surface quality

Surface roughness	R_a	R_{max}
Sliding surface	0,05 ... 0,3 µm	≤2,5 µm
Groove base	≤1,6 µm	≤6,3 µm
Groove flanks	≤3,0 µm	≤15,0 µm

The surface hardness must be approx. 45 to 60 HRC (depth of hardening min. 0,5 mm). Percentage contact area M_r >50% to max 90% at cutting depth c = Rz/2 and reference line C ref = 0%. Abrasive surfaces, ridges, scratches and blow-holes are to be avoided.

DESIGN NOTES

Please observe our general design notes in.

Tolerance recommendation

Nominal Ø d	Borehole	Shaft	Groove base
... 500	h9	H8	h9
>500	h8	H7	h8

MERKEL ROTOMATIC M 17

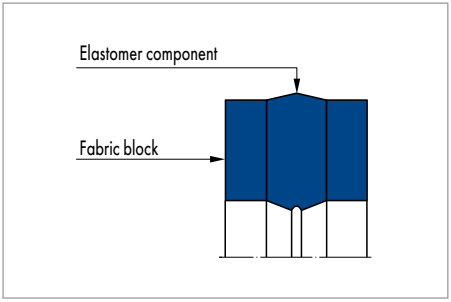

Merkel Rotomatic M 17

PRODUCT DESCRIPTION

Single-piece Merkel sealing ring comprising an elastomer part firmly set by fabric blocks on both sides which is provided with an oil groove at the contact area.

PRODUCT ADVANTAGES

Double-acting rod seal for pivoting motions in hydraulic systems, preferably for usage in hydraulic joints and rotary joints

- Wear-resistant
- Secure static sealing.

APPLICATION

Excavators, grippers, rotary joints.

MATERIAL

Material	Code
Nitrile rubber NBR	80 NBR B246/ BI-NBR B3B248

EINSATZBEREICH

Material	80 NBR B246/BI-NBR B3B248
	Temperature range in °C
Hydraulic oils HL, HLP	−30 ... +80
HFA fluids	+5 ... +60
HFB fluids	+5 ... +60
HFC fluids	−30 ... +60
HFD fluids	–
Water	+5 ... +80
HETG (rapeseed oil)	−30 ... +80
HEES (synthetic esters)	−30 ... +80
HEPG (glycol)	−30 ... +60
Mineral greases	−30 ... +80
Pressure p in MPa	20
Running speed v in m/s	0,1

If the seal set is to be used for permanent rotational movement, please consult us first. Other material combinations are available on request.

Surface quality

Surface roughness	R_a	R_{max}
Sliding surface	0,05 ... 0,3 µm	≤2,5 µm
Groove base	≤1,6 µm	≤6,3 µm
Groove flanks	≤3,0 µm	≤15,0 µm

The surface hardness must be approx. 45 to 60 HRC (depth of hardening min. 0,5 mm). Percentage contact area M_r >50% to max 90% at cutting depth c = Rz/2 and reference line C ref = 0%. Abrasive surfaces, ridges, scratches and blow-holes are to be avoided.

DESIGN NOTES

Please observe our general design notes.

Tolerance recommendation

Recommended fit for pressures up to 20 MPa

Nominal Ø d	Borehole	Shaft	Groove base
... 60	H8	f8	H9
>60	H7	f7	H9

MERKEL ROTOMATIC M 19

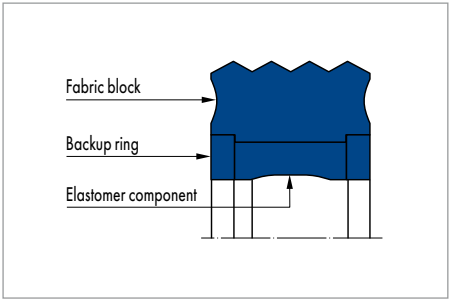

Merkel Rotomatic M 19

PRODUCT DESCRIPTION

Three-part Merkel seal set, consisting of an elastomer part with fabric reinforcement on the contact area which is formed so that two sealing edges form an oil groove, as well as two activated back-up rings.

PRODUCT ADVANTAGES

Double-acting rod seal for pivoting motions in hydraulic systems, preferably for usage in hydraulic joints and rotary joints

- Extrusion-secured through activated back-up ring
- Wear-resistant.

APPLICATION

Excavators, grippers, rotary joints.

MATERIAL

Material	Code
Nitrile rubber NBR/POM	80 NBR B246/ BI-NBR B4 B285/ POM PO202

OPERATING CONDITIONS

Material	80 NBR B246/ BI-NBR B4 B285/ POM PO202
	Temperature range in °C
Hydraulic oils HL, HLP	−30 ... +80
HFA fluids	+5 ... +60
HFB fluids	+5 ... +60
HFC fluids	−30 ... +60
HFD fluids	–
Water	+5 ... +80
HETG (rapeseed oil)	−30 ... +80
HEES (synthetic ester)	−30 ... +80
HEPG (glycol)	−30 ... +60
Mineral greases	−30 ... +80
Pressure p in MPa	40
Running speed v in m/s	0,2

If the seal set is to be used for permanent rotational movement, please consult us first.

Surface quality

Surface roughness	R_a	R_{max}
Sliding surface	0,05 ... 0,3 µm	≤2,5 µm
Groove base	≤1,6 µm	≤6,3 µm
Groove flanks	≤3,0 µm	≤15,0 µm

The surface hardness must be approx. 45 to 60 HRC (depth of hardening min. 0,5 mm). Percentage contact area M_r >50% to max 90% at cutting depth c = Rz/2 and reference line C ref = 0%. Abrasive surfaces, ridges, scratches and blow-holes are to be avoided.

DESIGN NOTES

Please observe our general design notes.

Tolerance recommendation and dimension D2

Recommended fit for pressures up to 40 MPa

Profile	D2	Tolerance level D2	Shaft	Groove base
7,5	d +0,2* d +0,3	H8	f8	H9
10,0	d +0,3* d +0,5	H8	f8	H9
12,5	d +0,5* d +0,7	H8	f8	H9

* In dependence on the H dimension of the back-up ring.

SIMMERRING RADIAMATIC® EWDR MADE OF PTFE

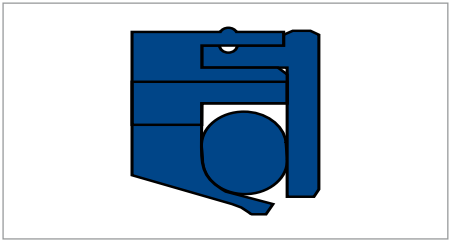

Simmerring Radiamatic® EWDR

PRODUCT DESCRIPTION

Pressure-relieved Simmerring with a pressure ring made of PTFE compound, a stainless steel clamping ring and an O-ring (FKM) as a secondary seal.

PRODUCT ADVANTAGES

Secure with simultaneous high pressure and high speed
- Low losses
- Low leak rate
- Easy fitting
- The shaft must not be machined on maintenance or seal replacement.

APPLICATION

- Primary seal in pumps and compressors
- Rotary joints for coolants and hydraulic fluid as well as gases
- Safety seal in addition to floating ring seals.

MATERIAL

PTFE carbon (standard quality)	Approved to KTW (drinking water) and BAM (oxygen)
PTFE Ekonol	Positively assessed by TNO, Nutrition and Food Research Laboratory (NL), for foodstuffs
Clamping ring	Usage of stainless steels

OPERATING CONDITIONS

Media	Resistance per FKM
Temperature	–20 ... +200 °C
Circumferential speed	max. 20 m/s for 1 MPa
Pressure difference	max. 3 MPa ... 0,2 MPa
For vacuum or pressure reversal	up to 0,2 MPa, housing closed

Surface, hardness

Peak-to-valley heights	R_a	R_t
Housing	<1,8 µm	<10,0 µm
Shaft, ground with no lead	0,1 ... 0,2 µm	0,5 ... 1,0 µm
Hardness of the contact area*	50–65 HRC, >0,5 mm depth of hardening	

* depending on material

DESIGN NOTES

Tolerances

Shaft	Radial shaft deflection, max.*
h11	±0,05 mm

* depending on increase in rotational speed, the radial shaft deflection may need to be more tightly limited. Please enquire.

p · v Diagram

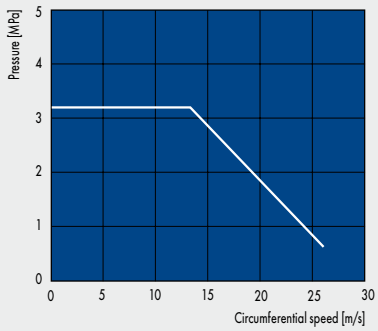

Test time	5–6 h dynamic; 4–16 h static/un-pressurised
Medium	Heat transfer oil
Temperature	85 °C at the seal

FITTING & INSTALLATION

Fitting sequence: press Simmerring Radiamatic EWDR into housing; insert shaft.

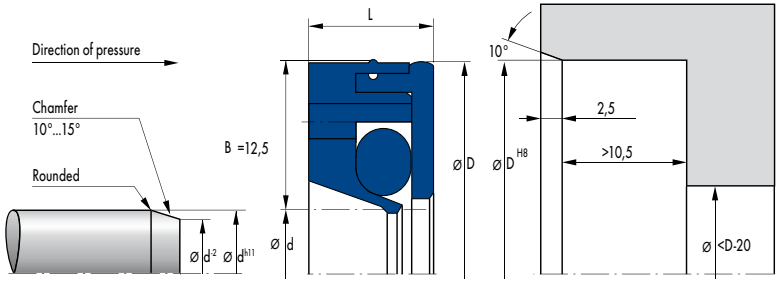

Ø d	Ø D	L
20	45	10,5
25	50	10,5
28	53	10,5
30	55	10,5
35	60	10,5
40	65	10,5
45	70	10,5
50	75	10,5
55	80	10,5
60	85	10,5
65	90	10,5
70	95	10,5
75	100	10,5
80	105	10,5
90	115	10,5
100	125	10,5

Other dimensions on enquiry.

SIMMERRING RADIAMATIC® HTS II MADE OF PTFE

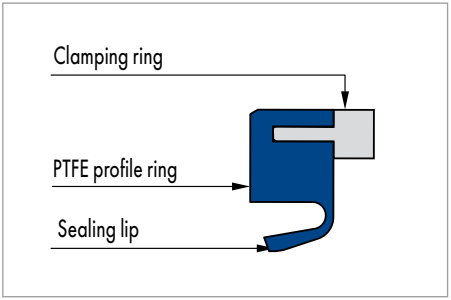

Simmerring Radiamatic® HTS II

PRODUCT DESCRIPTION

Simmerring for open housings. Significantly reduced lip pre-load compared to conventional geometries with high level of protection against leaks.

PRODUCT ADVANTAGES

- Low friction torque
- Good dry running properties
- Low clearance volume
- Easy to clean
- Type can be easily matched to housing.

APPLICATION

Rotary pumps, agitators, gearboxes, fans, compressors, mixers, machine tools.

MATERIAL

PTFE carbon (standard quality)	Approved to KTW (drinking water) and BAM (oxygen)
PTFE Ekonol	Positively assessed by TNO, Nutrition and Food Research Laboratory (NL), for foodstuffs
Clamping ring	Usage of stainless steels

OPERATING CONDITIONS

Temperature range	−20 ... +200 °C
Circumferential speed	18 m/s for 0,15 MPa
Abs. pressure	0,6 MPa

When used un-pressurised, significantly higher circumferential speeds are possible. Special versions are available for alternating operation in pressure/vacuum.

Surface, hardness

Peak-to-valley heights	R_a	R_t
Housing	<1,8 µm	≤10,0 µm
Shaft, ground with no lead	0,1 ... 0,2 µm	0,5 ... 1,0 µm
Hardness of the contact area	50 ... 65 HRC, >0,5 mm depth of hardening	

The surface hardness of the running surface must be approx. 30 HRC.

Percentage contact area M_r > 50% up to max. 90% at cutting depth c = Rz/2 and reference line C ref = 0 %.

DESIGN NOTES

Please observe our general design notes.

Tolerances

Housing bore	Shaft	Radial shaft deflection, max.*
H8	h11	±0,05 mm

* depending on increase in rotational speed, the radial shaft deflection may need to be more tightly limited. Please enquire.

p · v Diagram

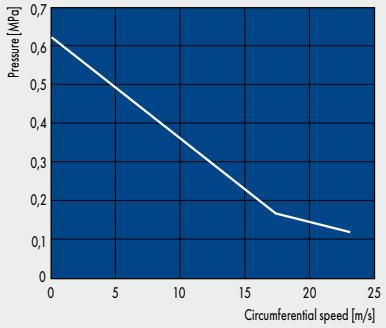

Test time	5 ... 6 h dynamic; 4 ... 16 h static/un-pressurised
Medium	Heat transfer oil
Temperature	85 °C at the seal

FITTING & INSTALLATION

Careful fitting is a prerequisite for the correct function of the seal.

SIMMERRING RADIAMATIC® R 35

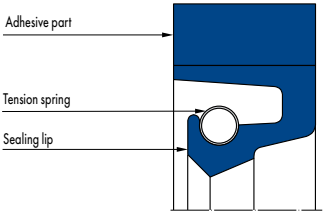

Simmerring Radiamatic® R 35

PRODUCT DESCRIPTION

Simmerring with a fabric reinforced static part that is securely joined to the elastomer sealing lip. The sealing lip is also pre-loaded with a garter spring.

PRODUCT ADVANTAGES

Sealing ring is used, in case of adequate lubrication by the medium to be sealed, preferably where shafts pass through walls in mills and large gearboxes in heavy machinery manufacture.

- Particularly robust static part
- Lasting radial contact pressure
- Highly wear-resistant.

APPLICATION

Mills, ship building, steel hydraulics engineering, wind power plants.

MATERIAL

Sealing lip	Static part	Tension spring
80 NBR B241	Impregnated cotton fabric B4 B248	ST 1.4571
80 FKM K670	Impregnated aramide fabric C2 K670	ST 1.4571
75 HNBR U467	Impregnated aramide fabric C2 U464	ST 1.4571

OPERATING CONDITIONS

Material	80 NBR B241	80 FKM K670	75 HNBR U467
	Temperature range in °C		
Mineral oils	−30 ... +100	−10 ... +180	−20 ... +140
Water	+5 ... +100	+5 ... +80	+5 ... +100
Lubricating greases	−30 ... +100	−10 ... +180	−20 ... +140
Rolling oil emulsion	on enquiry		
Pressure p in MPa	0,05		
Running speed v in m/s	20	25	25

Other media on enquiry. Application parameters are recommended values, do not utilise all parameters simultaneously.

Surface quality

Peak-to-valley heights	R_a	R_{max}
Running surface	≤0,6 µm	≤2,5 µm
Housing	≤4 µm	≤15 µm

The contact area is machined by plunge grinding, i.e. without feed. The surface hardness must be approx. 60 HRC (depth of hardening min. 0,5 mm). With increasing circumferential speed the contact area should be manufactured with increasing peak-to-valley heights R_a. The surface should not be too smooth so that an adequate film of lubricant can form. Recommended value: $R_{a\ min}$ = 0,1 µm. Percentage contact area M_r >50% to max. 90% at cutting depth c = Rz/2 and reference line C ref = 0%. Abrasive surfaces, ridges, scratches and blow-holes are to be avoided.

DESIGN NOTES

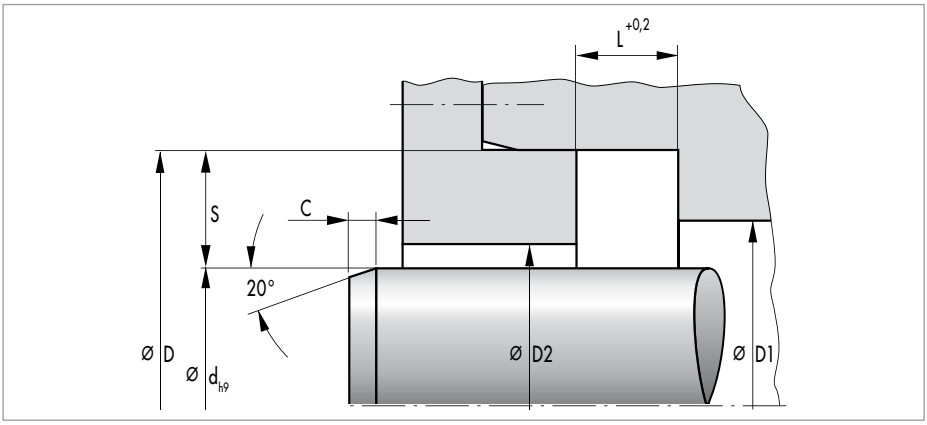

Please observe our general design notes.

Lead-in chamfers

See dimension "C" in the article list.

Tolerances

D	Tolerance
<500	H8
>500	+0,0004 x D

Overall eccentricity

The permissible overall eccentricity (static and dynamic eccentricity) between shaft and housing is dependent on the seal profile and circumferential speed. If necessary, we will provide recommended values.

Housing recommendations for new designs

d	S (Profile)	L
>100	20	16
>250	22	20
<450	25	22
>750	32	25

FITTING & INSTALLATION

For Simmerring Radiamatic R 35 an axially accessible housing is necessary, as the rings must have low inclination. The Radiamatic R 35 rings are supplied with oversize seal width. For reliable function the Radiamatic R rings must be axially compressed to the dimension "L". An open housing with cover plate and tightening screws is necessary. Specific deformation forces are necessary for the compression. The cover plate and the tightening screws are to be designed appropriately. Please request recommended values.

SIMMERRING RADIAMATIC® R 36

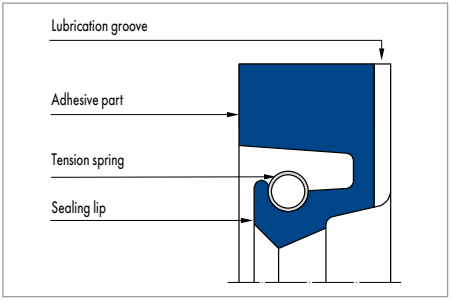

Simmerring Radiamatic® R 36

PRODUCT DESCRIPTION

Simmerring with a fabric reinforced static part that is securely joined to the elastomer sealing lip. The sealing lip is also pre-loaded with a garter spring.

PRODUCT ADVANTAGES

Sealing ring is used, in case of adequate lubrication by the medium to be sealed, preferably where shafts pass through walls in mills and large gearboxes in heavy machinery manufacture.

- Particularly robust static part
- Lasting radial contact pressure
- Highly wear-resistant
- With design measures, e.g., metal support for the sealing lip, higher pressures are possible
- Overpressure requires the usage of endless seals
- Back-up ring drawings and installation instructions for open seals are available.

APPLICATION

Mills, ship building, steel hydraulics engineering, wind power plants.

MATERIAL

Sealing lip	Static part	Tension spring
80 NBR B241	Impregnated cotton fabric B4 B248	ST 1.4571
80 FKM K670	Impregnated aramide fabric	ST 1.4571
75 HNBR U467	Impregnated aramide fabric C2 U464	ST 1.4571

OPERATING CONDITIONS

Material	80 NBR B241	80 FKM K670	75 HNBR U467
	Temperature range in °C		
Mineral oils	−30 ... +100	−10 ... +180	−20 ... +140
Water	+5 ... +100	+5 ... +80	+5 ... +100
Lubricating greases	−30 ... +100	−10 ... +180	−20 ... +140
Rolling oil emulsion	on enquiry		
Pressure p in MPa	0,05		
Running speed v in m/s	20	25	250

Other media on enquiry. Application parameters are recommended values, do not utilise all parameters simultaneously.

Surface quality

Peak-to-valley heights	R_a	R_{max}
Running surface	≤0,6 µm	≤2,5 µm
Housing	≤4 µm	≤15 µm

The contact area is machined by plunge grinding, i.e. without feed. The surface hardness must be approx. 60 HRC (depth of hardening min. 0,5 mm). With increasing circumferential speed the contact area should be manufactured with increasing peak-to-valley heights R_a. The surface should not be too smooth so that an adequate film of lubricant can form. Recommended value: $R_{a\ min}$ = 0,1 µm. Percentage contact area M_r >50% to max. 90% at cutting depth c = Rz/2 and reference line C ref = 0%. Abrasive surfaces, ridges, scratches and blow-holes are to be avoided.

DESIGN NOTES

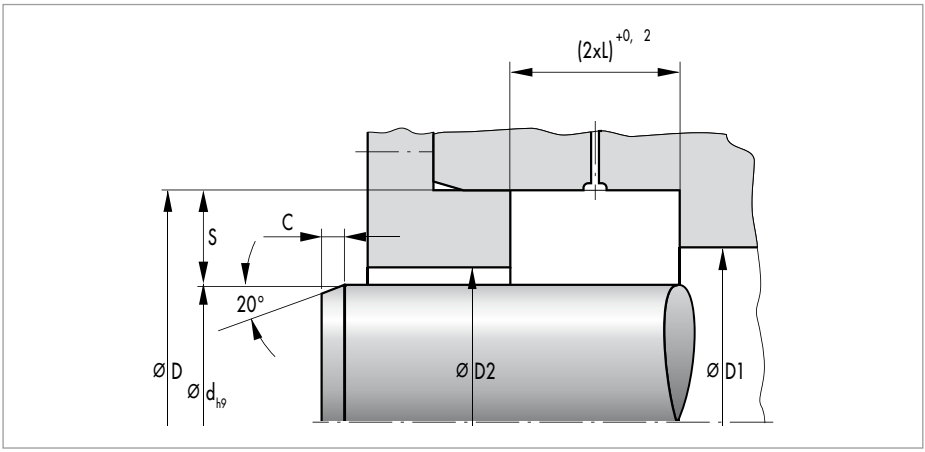

Lead-in chamfers

See dimension "C" in the article list.

Tolerances

D	Tolerance
<500	H8
>500	+0,0004 x D

Overall eccentricity

The permissible overall eccentricity (static and dynamic eccentricity) between shaft and housing is dependent on the seal profile and circumferential speed. If necessary, we will provide recommended values.

Housing recommendations for new designs

d	S (Profile)	L
>100	20	16
>250	22	20
<450	25	22
>750	32	25

FITTING & INSTALLATION

For Simmerring Radiamatic R 36 an axially accessible housing is necessary, as the rings must have low inclination. The Radiamatic R 36 rings are supplied with oversize seal width. For reliable function the Radiamatic R rings must be axially compressed to the dimension "L". An open housing with cover plate and tightening screws is necessary. Specific deformation forces are necessary for the compression. The cover plate and the tightening screws are to be designed appropriately. Please request recommended values.

SIMMERRING RADIAMATIC® R 37

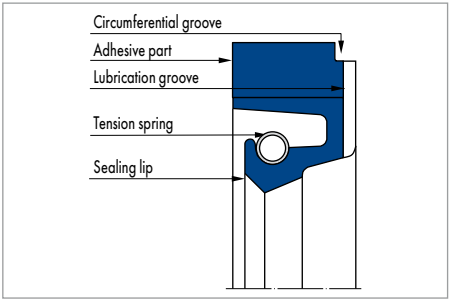

Simmerring Radiamatic® R 37

PRODUCT DESCRIPTION

Simmerring with a fabric reinforced static part that is securely joined to the elastomer sealing lip. The sealing lip is also pre-loaded with a garter spring.

PRODUCT ADVANTAGES

Sealing ring is used, in case of adequate lubrication by the medium to be sealed, preferably where shafts pass through walls in mills and large gearboxes in heavy machinery manufacture.

- Particularly robust static part
- Lasting radial contact pressure
- Highly wear-resistant.

APPLICATION

Mills, ship building, steel hydraulics engineering, wind power plants.

MATERIAL

Sealing lip	Static part	Tension spring
80 NBR B241	Impregnated cotton fabric B4 B248	ST 1.4571
80 FKM K670	Impregnated aramide fabric C2K670	ST 1.4571
75 HNBR U467	Impregnated aramide fabric C2U464	ST 1.4571

OPERATING CONDITIONS

Material	80 NBR B241	80 FKM K670	75 HNBR U467
	Temperature range in °C		
Mineral oils	−30 ... +100	−10 ... +180	−20 ... +140
Water	+5 ... +100	+5 ... +80	+5 ... +100
Lubricating greases	−30 ... +100	−10 ... +180	−20 ... +140
Rolling oil emulsion	on enquiry		
Pressure p in MPa	0,05		
Running speed v in m/s	20	25	250

Other media on enquiry. Application parameters are recommended values, do not utilise all parameters simultaneously.

Surface quality

Peak-to-valley heights	R_a	R_{max}
Running surface	≤0,6 µm	≤2,5 µm
Housing	≤4 µm	≤15 µm

The contact area is machined by plunge grinding, i.e. without feed. The surface hardness must be approx. 60 HRC (depth of hardening min. 0,5 mm). With increasing circumferential speed the contact area should be manufactured with increasing peak-to-valley heights R_a. The surface should not be too smooth so that an adequate film of lubricant can form. Recommended value: $R_{a\ min}$ = 0,1 µm. Percentage contact area M_r >50% to max. 90% at cutting depth c = Rz/2 and reference line C ref = 0%. Abrasive surfaces, ridges, scratches and blow-holes are to be avoided.

DESIGN NOTES

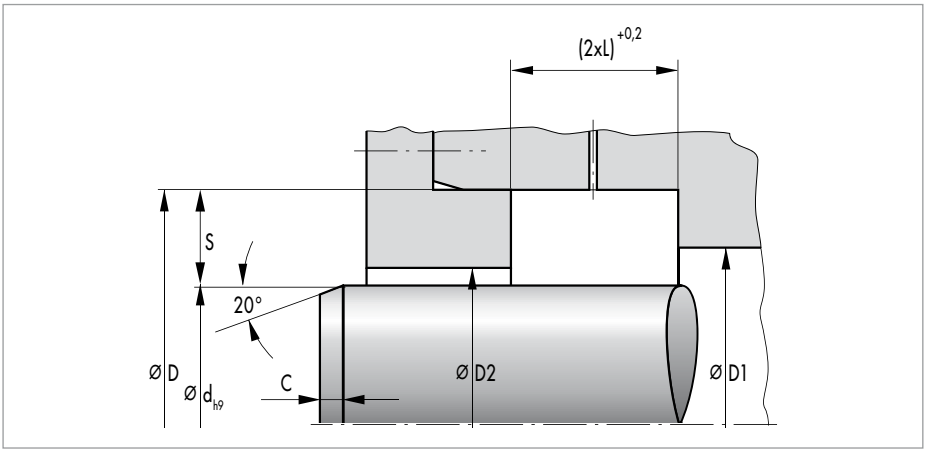

Lead-in chamfers
See dimension "C" in the article list.

Tolerances

D	Tolerance
<500	H8
>500	+0,0004 x D

Overall eccentricity
The permissible overall eccentricity (static and dynamic eccentricity) between shaft and housing is dependent on the seal profile and circumferential speed. If necessary, we will provide recommended values.

Housing recommendations for new designs

d	S (Profile)	L
>100	20	16
>250	22	20
<450	25	22
>750	32	25

FITTING & INSTALLATION

For Simmerring Radiamatic R 37 an axially accessible housing is necessary, as the rings must have low inclination. The Radiamatic R 37 rings are supplied with oversize seal width. For reliable function the Radiamatic R rings must be axially compressed to the dimension "L". An open housing with cover plate and tightening screws is necessary. Specific deformation forces are necessary for the compression. The cover plate and the tightening screws are to be designed appropriately. Please request recommended values.

SIMMERRING RADIAMATIC® R 58

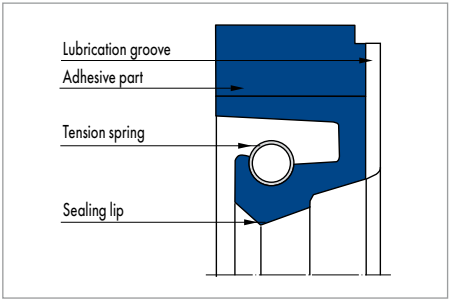

Simmerring Radiamatic® R 58

PRODUCT DESCRIPTION

Simmerring with a fabric reinforced static part that is securely joined to the elastomer sealing lip. The sealing lip is also pre-loaded with a garter spring.

PRODUCT ADVANTAGES

The sealing ring has a groove around the circumference to facilitate additional lubrication from the outside. The Simmerring Radiamatic R 58 was developed for the special requirements of grease-lubricated bearings in mill manufacture.

- Particularly robust static part
- Lasting radial contact pressure
- Highly wear-resistant.

APPLICATION

Mills.

MATERIAL

Sealing lip	Static part	Tension spring
80 NBR B241	Impregnated cotton fabric B4 B248	ST 1.4571

Other materials on enquiry.

OPERATING CONDITIONS

Material	80 NBR B241
	Temperature range in °C
Mineral oils	−30 ... +100
Water	+5 ... +100
Lubricating greases	−30 ... +100
Rolling oil emulsion	on enquiry
Pressure p in MPa	0,05
Running speed v in m/s	15

Other media on enquiry. Application parameters are recommended values, do not utilise all parameters simultaneously.

Surface quality

Peak-to-valley heights	R_a	R_{max}
Running surface	≤0,6 µm	≤2,5 µm
Housing	≤4 µm	≤15 µm

The contact area is machined by plunge grinding, i.e. without feed. The surface hardness must be approx. 60 HRC (depth of hardening min. 0,5 mm). With increasing circumferential speed the contact area should be manufactured with increasing peak-to-valley heights R_a. The surface should not be too smooth so that an adequate film of lubricant can form. Recommended value: $R_{a\ min}$ = 0,1 µm. Percentage contact area M_r >50% to max. 90% at cutting depth c = Rz/2 and reference line C ref = 0%. Abrasive surfaces, ridges, scratches and blow-holes are to be avoided.

DESIGN NOTES

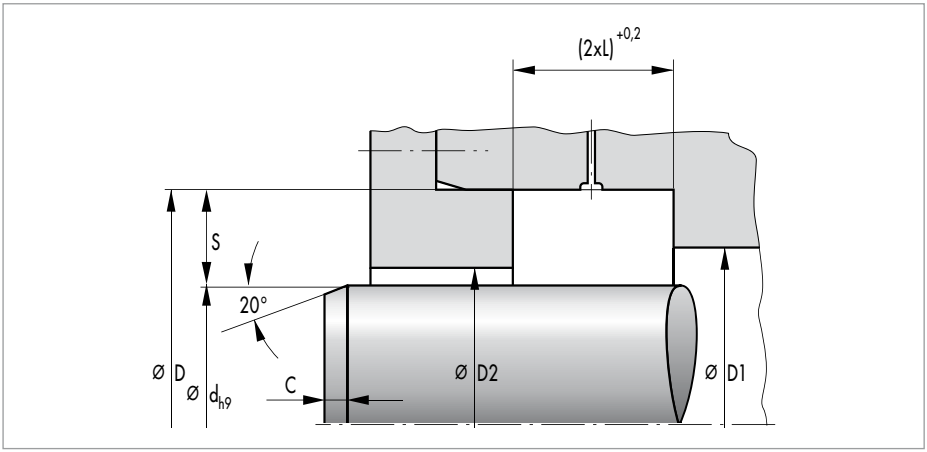

Lead-in chamfers

See dimension "C" in the article list.

Tolerances

D	Tolerance
<500	H8
>500	+0,0004 x D

Overall eccentricity

The permissible overall eccentricity (static and dynamic eccentricity) between shaft and housing is dependent on the seal profile and circumferential speed.
If necessary, we will provide recommended values.

Housing recommendations for new designs

d	S (Profile)	L
>100	20	16
>250	22	20
<450	25	22
>750	32	25

FITTING & INSTALLATION

For Simmerring Radiamatic R 58 an axially accessible housing is necessary, as the rings must have low inclination. The Radiamatic R 58 rings are supplied with oversize seal width. For reliable function the Radiamatic R rings must be axially compressed to the dimension "L". An open housing with cover plate and tightening screws is necessary. Specific deformation forces are necessary for the compression. The cover plate and the tightening screws are to be designed appropriately. Please request recommended values.

SIMMERRING RADIAMATIC® R 35 LD

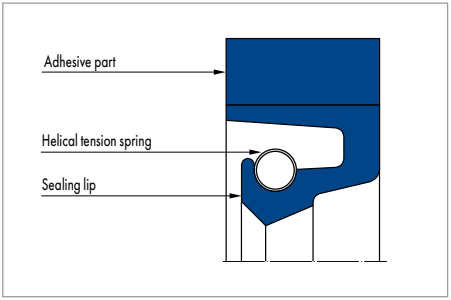

Simmerring Radiamatic® R 35 LD

PRODUCT ADVANTAGES

Sealing ring is used, in case of adequate lubrication by the medium to be sealed, preferably where shafts pass through walls in mills and large gearboxes in heavy machinery manufacture.

- Particularly robust static part
- Lasting radial contact pressure
- Highly wear-resistant.

Higher pressures are possible with design measures, e.g. metal support for the sealing lip. Overpressure requires the usage of endless seals. Back-up ring drawings and installation instructions for open seals are available.

PRODUCT DESCRIPTION

Simmerring with a fabric reinforced static part that is securely joined to the elastomer sealing lip. The sealing lip is also pre-loaded with a garter spring.

APPLICATION

Mills, ship building.

MATERIAL

Sealing lip	Static part	Tension spring
80 NBR B241	Impregnated cotton fabric B4 B248	ST 1.4571
70 HNBR U467	Impregnated cotton fabric C2 U464	ST 1.4571

OPERATING CONDITIONS

Material	80 NBR B241	75 HNBR U467
	Temperature range in °C	
Mineral oils	−30 ... +100	−20 ... +140
Water	+5 ... +100	+5 ... +100
Lubricating greases	−30 ... +100	−20 ... +140
Rolling oil emulsion	on enquiry	
Pressure p in MPa	0,05	
Running speed v in m/s	20 (NBR), 25 (HNBR)	

Other media on enquiry. Application parameters are recommended values, do not utilise all parameters simultaneously.

Surface quality

Peak-to-valley heights	R_a	R_{max}
Running surface	≤0,6 µm	≤2,5 µm
Housing	≤4,0 µm	≤15,0 µm

The contact area is machined by plunge grinding, i.e. without feed. The surface hardness must be approx. 60 HRC (depth of hardening min. 0,5 mm). With increasing circumferential speed the contact area should be manufactured with increasing peak-to-valley heights R_a. The surface should not be too smooth so that an adequate film of lubricant can form. Recommended value: $R_{a\ min}$ = 0,1 µm. Percentage contact area M_r >50% to max. 90% at cutting depth c = Rz/2 and reference line C ref = 0%. Abrasive surfaces, ridges, scratches and blow-holes are to be avoided.

DESIGN NOTES

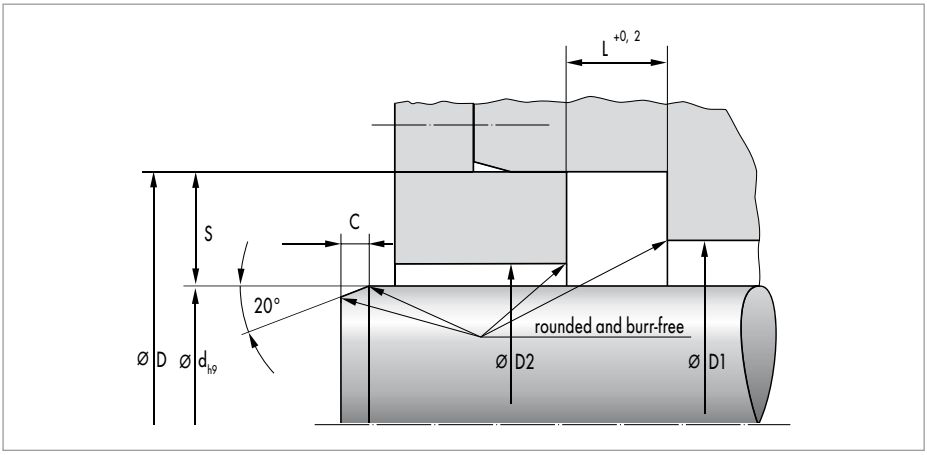

AVAILABLE DIMENSIONS

Profile S x L	Ø range
32 x 25	d >1100 ... 3000

SIMMERRING RADIAMATIC® RS 85

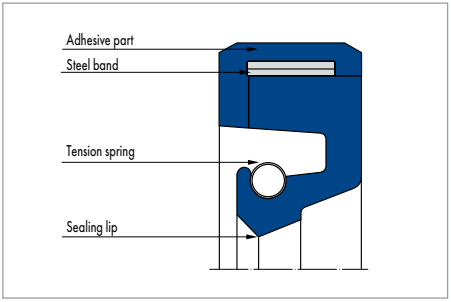

Simmering Radiamatic® RS 85

PRODUCT ADVANTAGES

Self-holding Simmering for shaft pass through walls in heavy machinery manufacture.

- Long-lasting tight fit
- Lasting radial contact pressure
- Highly wear-resistant.

An axially accessible housing is necessary for the fitting. The non-pressurised side of the sealing ring is to be reinforced for pressurisation. In the unpressurised state, an axial reinforcement on the non-pressurised side is not necessary. Only endless self-holding Simmerrings Radiamatic RS 85 are available.

PRODUCT DESCRIPTION

Self-holding Simmering made from two functionally suitable elastomer components and an integrated steel strip. The tension springs support the radial contact pressure on the shaft.

APPLICATION

Rolling mills, large gearboxes.

MATERIAL

Sealing lip	Static part	Steel strip	Tension spring
80 NBR B241	85 NBR B247	ST 1.4310	ST 1.4571
75 HNBR U467	85 HNBR 10040	ST 1.4310	ST 1. 4571
80 FKM K670	90 FKM K683	ST 1.4310	ST 1.4571

OPERATING CONDITIONS

Material	80 NBR B241	75 HNBR U467	80 FKM K670
	Temperature range in °C		
Mineral oils	−30 ... +100	−20 ... +140	−10 ... +180
Water	+5 ... +100	+5 ... +100	+5 ... +80
Lubricating greases	−30 ... +100	−20 ... +140	−10 ... +180
Rolling oil emulsion	on enquiry		
Pressure p in MPa	0,05		
Running speed v in m/s	20	25	25

Other media on enquiry. Application parameters are recommended values, do not utilise all parameters simultaneously.

Surface quality

Peak-to-valley heights	R_a	R_{max}
Running surface	≤0,6 µm	≤2,5 µm
Housing	≤4,0 µm	≤15,0 µm

The contact area is machined by plunge grinding, i.e. without feed. The surface hardness must be approx. 60 HRC (depth of hardening min. 0,5 mm). With increasing circumferential speed, the contact area should be manufactured with increasing peak-to-valley heights R_a. The surface should not be too smooth so that an adequate film of lubricant can form. Recommended value: $R_{a\ min}$ = 0,1mm. Percentage contact area M_r >50% to max. 90% at cutting depth c = Rz/2 and reference line C ref = 0%. Abrasive surfaces, ridges, scratches and blow-holes are to be avoided.

DESIGN NOTES

Please observe our general design notes.

FITTING & INSTALLATION

Careful fitting is a prerequisite for the correct function of the seal.

Housing recommendations for new designs

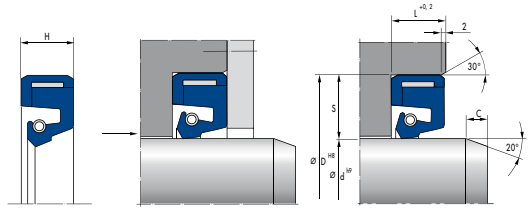

Ø d	S (Profile)	L	a
200 ... 450	20	20	4
	22	20	4
>450 ... 750	22	22	4
	25	22	4
>750	25	25	5
	30	25	5
	32	25	5

Lead-in chamfer

Ø d	c
<200	8
>200 ... 500	10
>500 ... 800	13
>800 ... 1200	16
>1200	20

SIMMERRING RADIAMATIC® RHS 51

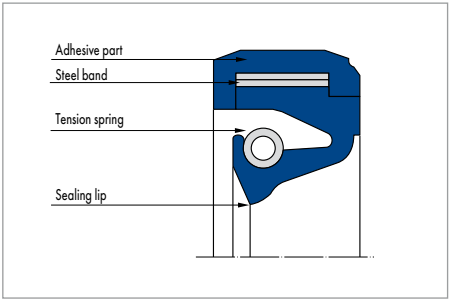

Simmerring Radiamatic® RHS 51

PRODUCT DESCRIPTION

High-speed Simmerring made from two functionally suitable elastomer components and an integrated steel strip. Two interleaved tension springs ensure an even radial force over the entire circumference length of the sealing edge even with high shaft centre offset.

PRODUCT ADVANTAGES

Self-holding Simmerring for shaft pass through walls in mills and large gearboxes in heavy machinery manufacture. The sealing ring has radial grooves to facilitate additional lubrication from outside. Only endless self-holding Simmerrings are available

- Long-lasting tight fit
- Lasting radial contact pressure
- Highly wear-resistant
- High permissible shaft offset
- High permissible circumferential speed.

APPLICATION

Rolling mills, large gearboxes.

MATERIAL

Sealing lip	Static part	Steel strip	Tension spring
80 NBR B241	85 NBR B247	ST 1.4310	ST 1.4571
75 HNBR U467	85 HNBR 10040	ST 1.4310	ST 1. 4571
80 FKM K670	90 FKM K683	ST 1.4310	ST 1.4571

OPERATING CONDITIONS

Material	80 NBR B241	75 HNBR U467	80 FKM K670
	Temperature range in °C		
Mineral oils	−30 ... +100	−20 ... +120	−10 ... +150
Water	+5 ... +100	+5 ... +100	+5 ... +80
Lubricating greases	−30 ... +100	−20 ... +120	−10 ... +150
Rolling oil emulsion	on enquiry		
Pressure p in MPa	0,02		
Running speed v in m/s	25	30	35

Other media on enquiry. Application parameters are recommended values, do not utilise all parameters simultaneously.

Surface quality

Peak-to-valley heights	R_a	R_{max}
Running surface	0,15 ... 0,3 µm	≤2,5 µm
Housing	≤4,0 µm	≤15,0 µm

The contact area is machined by plunge grinding, i.e. without feed. The surface hardness must be approx. 60 HRC (depth of hardening min. 0,5 mm). With increasing circumferential speed the contact area should be manufactured with increasing peak-to-valley heights R_a. The surface should not be too smooth so that an adequate film of lubricant can form. Recommended value: $R_{a\ min}$ = 0,1 µm. Percentage contact area M_r >50% to max. 90% at cutting depth c = Rz/2 and reference line C ref = 0%. Abrasive surfaces, ridges, scratches and blow-holes are to be avoided.

DESIGN NOTES

The permissible shaft offset (static eccentricity, centre offset) is dependent on the shaft diameter.

Shaft Ø d	Permissible shaft offset
200 ... 320	2,0 mm
>320 ... 450	2,5 mm
>450	3,0 mm

The permissible shaft offset (dynamic eccentricity) is dependent on the seal profile and the circumferential speed. Please request recommended values.

Lead-in chamfer

See dimension "C" in the housing recommendations for new designs.

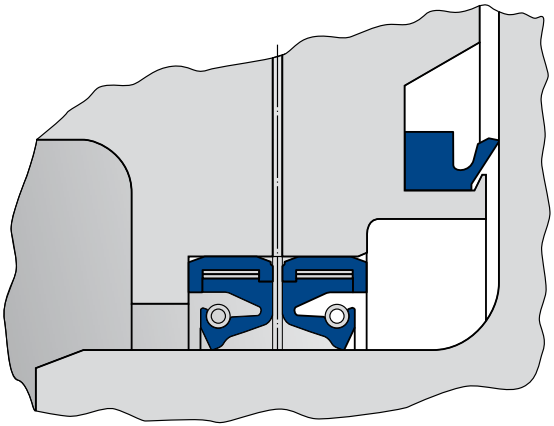

Typical seal arrangement

FITTING & INSTALLATION

An axially accessible housing is necessary for the fitting of the Simmerring Radiamatic RHS 51.
Only endless self-holding Simmerrings Radiamatic RHS 51 are available.

Housing recommendations for new designs

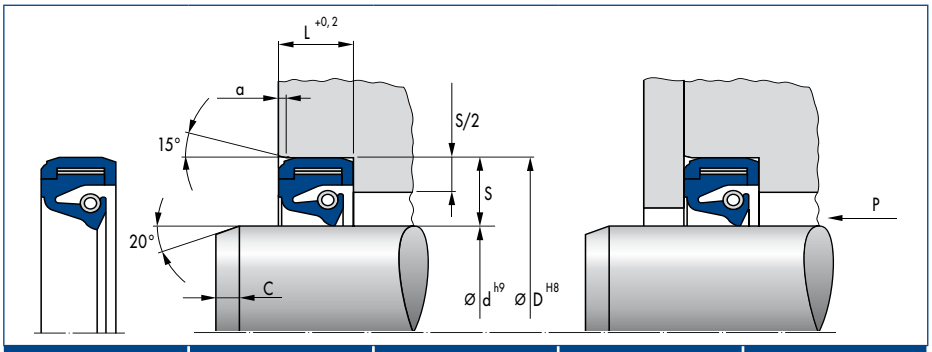

Ø d	S (Profile)	L	C	a
200 ... 450	20	20	12	4
	22	20	12	4
>450 ... 750	22	22	15	4
	25	22	15	4
>750	25	25	18	5
	30	25	18	5

MERKEL U-RING N 1, AUN 1

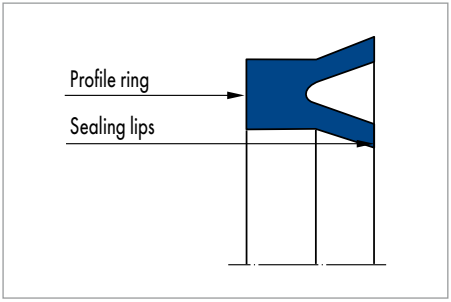

Merkel U-Ring N 1, AUN 1

PRODUCT DESCRIPTION

Merkel U-ring with symmetrical profile for rods/pistons.

PRODUCT ADVANTAGES

Single-acting piston or rod seal, preferably for spare parts requirements.

APPLICATION

Special cylinders, agricultural machinery, cranes, injection moulding machines, loading platforms, standard cylinders.

MATERIAL

N 1

Material	Code	Hardness
Nitrile rubber	90 NBR 109	94 AU 925

AUN 1

Material	Code	Hardness
Polyurethane	94 AU 925	94 Shore A

OPERATING CONDITIONS

Material	90 NBR 109	94 AU 925
	Temperature range in °C	
Hydraulic oils HL, HLP	−30 ... +100	−30 ... +110
HFA fluids	+5 ... +60	+5 ... +50
HFB fluids	+5 ... +60	+5 ... +50
HFC fluids	−30 ... +60	−30 ... +40
HFD fluids	–	–
Water	+5 ... +90	+5 ... +40
HETG (rapeseed oil)	−30 ... +80	−30 ... +60
HEES (synthetic ester)	–	−30 ... +80
HEPG (glycol)	−30 ... +60	−30 ... +40
Mineral greases	−30 ... +100	−30 ... +110
Pressure p in MPa	10 MPa	20 MPa
Running speed v in m/s	0,5	

Surface quality

Surface roughness	R_a	R_{max}
Sliding surface	0,05 ... 0,3 µm	≤2,5 µm
Groove base	≤1,6 µm	≤6,3 µm
Groove flanks	≤3,0 µm	≤15,0 µm

Percentage contact area M_r >50% to max. 90% at cutting depth c = Rz/2 and reference line C ref = 0%.

DESIGN NOTES

Please observe our general design notes.

Gap dimension

The decisive factor for the function of the seal is the largest gap dimension occurring during operation on the non-pressurised side of the seal.

N 1 (material 90 NBR 109)

Profile	Max. permissible gap dimension			
	2,5 MPa	5 MPa	7,5 MPa	10 MPa
≤5,0	0,45	0,35	0,30	0,25
>5,0	0,50	0,40	0,35	0,30

AUN 1 (material 94 AU 925)

Profile	Max. permissible gap dimension			
	5 MPa	10 MPa	20 MPa	10 MPa
≤5,0	0,55	0,40	0,35	0,25
>5,0	0,66	0,45	0,40	0,30

Tolerance recommendation and dimension D2/d2

The admissible gap width, tolerances, guide play and deflection of the guide under load are to be taken into account when designing D2 (rod seal) or d2 (piston seal).

FITTING & INSTALLATION

Careful fitting is a prerequisite for the correct function of the seal. Note: the use of male adaptors increases the reliability. Further information is available on enquiry.

MERKEL U-RING N 100, AUN 100

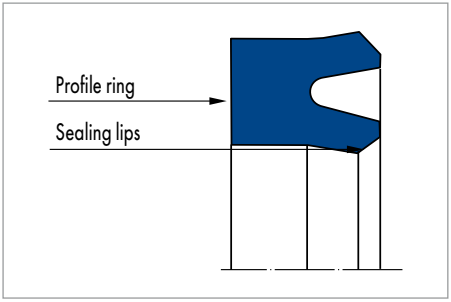

Merkel U-Ring N 100, AUN 100

PRODUCT DESCRIPTION

Merkel U-ring with symmetrical profile and set back sealing edges for rods/pistons.

PRODUCT ADVANTAGES

Single-acting piston or rod seal, preferably for spare parts requirements.

APPLICATION

Special cylinders, agricultural machinery, forestry equipment, injection moulding machines, loading platforms, standard cylinders.

MATERIAL

N 100

Material	Code	Hardness
Nitrile rubber	90 NBR 109	90 Shore A

AUN 100

Material	Code	Hardness
Polyurethane	94 AU 925	94 Shore A

OPERATING CONDITIONS

Material	90 NBR 109	94 AU 925
	Temperature range in °C	
Hydraulic oils HL, HLP	−30 ... +100	−30 ... +110
HFA fluids	+5 ... +60	+5 ... +60
HFB fluids	+5 ... +60	+5 ... +60
HFC fluids	−30 ... +60	−30 ... +50
HFD fluids	–	–
Water	+5 ... +90	+5 ... +40
HETG (rapeseed oil)	−30 ... +80	−30 ... +60
HEES (synthetic ester)	–	−30 ... +80
HEPG (glycol)	−30 ... +60	−30 ... +40
Mineral greases	−30 ... +100	−30 ... +110
Pressure p in MPa	10 MPa	30 MPa
Running speed v in m/s	0,5	

Surface quality

Surface roughness	R_a	R_{max}
Sliding surface	0,05 ... 0,3 µm	≤2,5 µm
Groove base	≤1,6 µm	≤6,3 µm
Groove flanks	≤3,0 µm	≤15,0 µm

Percentage contact area M_r >50% to max. 90% at cutting depth c = Rz/2 and reference line C ref = 0%.

DESIGN NOTES

Please observe our general design notes.

Gap dimension

The decisive factor for the function of the seal is the largest gap dimension occurring during operation on the non-pressurised side of the seal.

N 100 (material 90 NBR 109)

Profile	Max. permissible gap dimension		
	5 MPa	10 MPa	16 MPa
≤5,0	0,45	0,25	0,15
>5,0	0,50	0,30	0,20

AUN 100 (material 94 AU 925)

Profile	Max. permissible gap dimension			
	10 MPa	16 MPa	30 MPa	10 MPa
≤5,0	0,45	0,35	0,25	0,25
>5,0	0,50	0,40	0,30	0,30

Tolerance recommendation and dimension D2/d2

The admissible gap width, tolerances, guide play and deflection of the guide under load are to be taken into account when designing D_2 (rod seal) or d_2 (piston seal).

FITTING & INSTALLATION

Careful fitting is a prerequisite for the correct function of the seal. Note: the use of male adaptors increases the reliability. Further information is available on enquiry.

MERKEL COVER SEAL PU 82

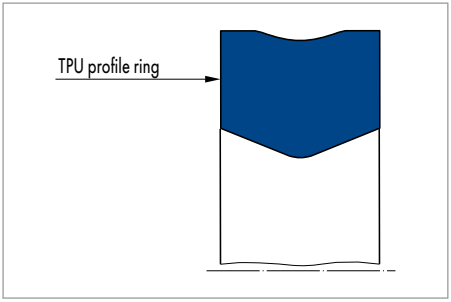

Merkel Cover Seal PU 82

PRODUCT DESCRIPTION

Single-piece, double-acting compact seal made from TPU for static sealing, inner sealing.

PRODUCT ADVANTAGES

- Interchangeable for O-ring housings and O-ring with back-up ring
- High reliability
- Simple and secure installation
- Simplified stockkeeping
- Gas proofness.

APPLICATION

- Higher operating pressure (up to 60 MPa)
- Gap for breathing (pipe expansion)
- Short rate of increase of the pressure (end position damping)
- Alternating in situ operating pressure
- Nominal diameter up to 2000 mm.

Cranes, construction machinery, industrial vehicles, forestry equipment, injection moulding machines, presses, wind power plants.

MATERIAL

Material	Code
Polyurethane	95 AU V142/94 AU 925

OPERATING CONDITIONS

Material	95 V142/94 AU 925
	Temperature range in °C
Hydraulic oils HL, HLP	−30 ... +110
HFA fluids	+5 ... +50
HFB fluids	+5 ... +50
HFC fluids	−30 ... +40
HFD fluids	–
Water	+5 ... +40
HETG (rapeseed oil)	−30 ... +60
HEES (synthetic ester)	−30 ... +80
HEPG (glycol)	−30 ... +50
Mineral greases	−30 ... +110
Pressure p in MPa	60

The specified values are maximum values and must not be applied simultaneously.

Surface quality

Surface roughness	R_a	R_{max}
Sliding surface	0,8 µm	3,2 µm
Groove base	1,6 µm	6,3 µm
Groove flanks	6,3 µm	20,0 µm
Lead-in chamfer*	0,8 µm	3,2 µm

* burr-free transition

DESIGN NOTES

Please observe our general design notes.

Tolerance recommendation

For pressures up to 60 MPa

Nominal Ø d	Borehole	Shaft
≤800	H7	f7
>800	+0,0 +0,1	−0,05 −0,15

FITTING & INSTALLATION

Careful fitting is a prerequisite for the correct function of the seal.

MODE OF OPERATION

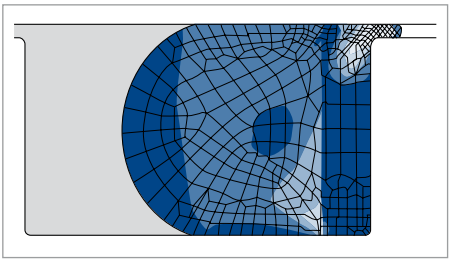

O-ring with PTFE back-up ring at 40 MPa operating pressure

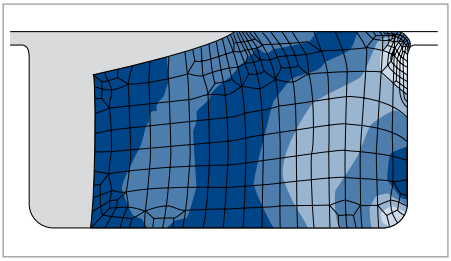

Cover Seal at 40 MPa operating pressure

MERKEL COVER SEAL PU 83

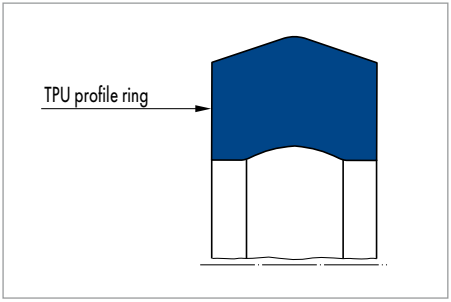

Merkel Cover Seal PU 83

PRODUCT DESCRIPTION

Single-piece, double-acting Merkel compact seal made from low temperature polyurethane for static sealing, outer sealing.

PRODUCT ADVANTAGES

- Interchangeable for O-ring housings and O-ring with back-up ring
- High reliability
- Simple and secure installation
- Simplified stockkeeping
- Gas-proof height.

APPLICATION

- Higher operating pressure (up to 60 MPa)
- Gap for breathing (pipe expansion)
- Short rate of increase of the pressure (end position damping)
- Alternating in situ operating pressure
- Nominal diameter up to 2000 mm.

Presses, steel industry, wind power plants, cranes, construction machinery, industrial vehicles, forestry equipment, injection moulding machines.

MATERIAL

Material	Code
Polyurethane	95 AU V142/94 AU 925

OPERATING CONDITIONS

Material	95 V142/94 AU 925
	Temperature range in °C
Hydraulic oils HL, HLP	−30 ... +110
HFA fluids	+5 ... +50
HFB fluids	+5 ... +50
HFC fluids	−30 ... +40
HFD fluids	–
Water	+5 ... +40
HETG (rapeseed oil)	−30 ... +60
HEES (synthetic esters)	−30 ... +80
HEPG (glycol)	−30 ... +50
Mineral greases	−30 ... +110
Pressure p in MPa	60

The specified values are maximum values and must not be applied simultaneously.

Surface quality

Surface roughness	R_a	R_{max}
Sliding surface	0,8 µm	3,2 µm
Groove base	1,6 µm	6,3 µm
Groove flanks	6,3 µm	20,0 µm
Lead-in chamfer*	0,8 µm	3,2 µm

* burr-free transition

DESIGN NOTES

Please observe our general design notes.

Tolerance recommendation

For pressures up to 60 MPa

Nominal Ø D	Borehole	Shaft
≤800	H7	f7
>800	+0,0 +0,1	−0,05 −0,15

FITTING & INSTALLATION

Careful fitting is a prerequisite for the correct function of the seal.

MODE OF OPERATION

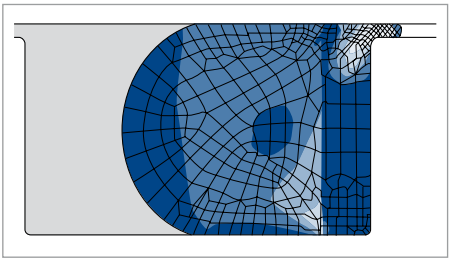

O-ring with PTFE back-up ring at 40 MPa operating pressure

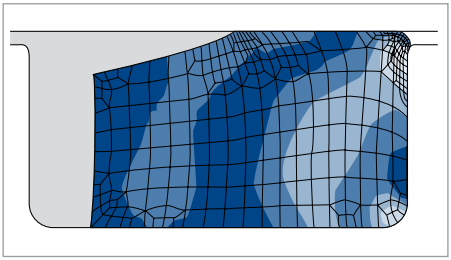

Cover Seal at 40 MPa operating pressure

MERKEL STIRCOMATIC SRC

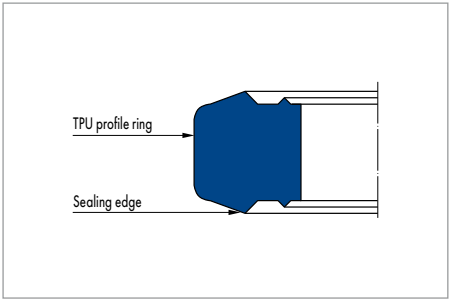

Merkel Stircomatic SRC

PRODUCT DESCRIPTION

Static Merkel seal made of a profiled ring with two cutting edge-shaped sealing edges on the front faces.

PRODUCT ADVANTAGES

- Good stress distribution due to the position of the sealing edge in the groove
- Secure seating in the housing for extremely high, pulsating pressure peaks
- Made of extrusion-resistant polyurethane material.

APPLICATION

Hydraulic control and regulation equipment, hydraulic hammers.

MATERIAL

Material	Code
Polyurethane	95 AU V142

OPERATING CONDITIONS

Material	95 V142
	Temperature range in °C
Hydraulic oils HL, HLP	−30 ... +110
HFA fluids	+5 ... +50
HFB fluids	+5 ... +50
HFC fluids	−30 ... +40
HFD fluids	–
Water	+5 ... +50
HETG (rapeseed oil)	−30 ... +60
HEES (synthetic esters)	−30 ... +80
HEPG (glycol)	−30 ... +50
Mineral greases	−30 ... +110
Pressure p in MPa	80

Surface quality

Surface roughness	R_a	R_{max}
Groove base	≤1,8 µm	≤6,3 µm
Groove flanks	≤3,0 µm	≤16,0 µm

DESIGN NOTES

A spot facing cutter is normally sufficient for the manufacture of a housing. A relatively high degree of roughness on the front face can be permitted.

ISC O-RING

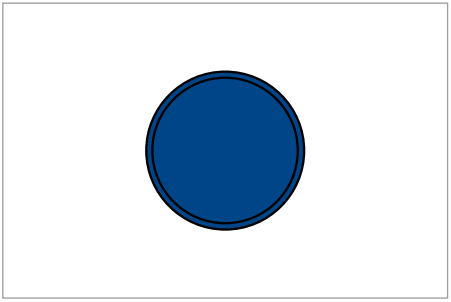

ISC O-Ring

PRODUCT DESCRIPTION

ISC O-Rings are endless round sealing rings of circular cross section. They are mainly used to seal stationary machine components – static case – against fluid and gaseous media. In certain conditions, they can also be used as a dynamic sealing component for axial, rotating and oscillating movement.

PRODUCT ADVANTAGES

- In order to cover the widest possible range of technical applications, ISC O-Rings are supplied in various different material qualities:
- All catalogue materials for ISC O-Rings are specified and certified.

MATERIAL

Material	Operating parameters range
72 NBR 872	Standard material, which can be used for most applications (mineral oils, mineral oil based hydraulic fluids, static pressures up to approx. 100 bar)
88 NBR 156	Use as 72 NBR 872, but suitable for higher pressures.
80 FKM 610	For chemically aggressive media and high temperatures
70 EPDM 281	For glycol based hydraulic fluids, brake fluid, hot water
Simriz® (70 FFKM 495)	Chlorinated and high polar organic solvents, aromatics, Strong organic and inorganic acids and alkalis

The technical data for the standard materials for ISC O-Ring is specified.
Special materials: for special applications a broad spectrum of other materials is available from FST.
ISC O-Rings made of these materials are not held in stock.

DESIGN NOTES

The dimensions of an ISC O-Ring are defined by inside dia. d_1 and ring thickness d_2. These dimensions represent the parameters for the ISC O-Ring. The code for an ISC O-Ring in standard material with inside dia. 20,2 mm and a ring thickness 3 mm is as follows: ISC O-Ring 20,2–3 72 NBR 872.

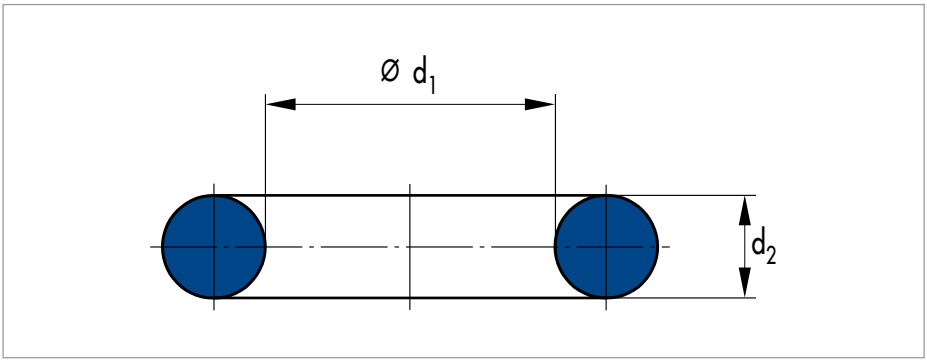

Drawing with dimensions

Please observe our general design notes.

Packaged unit
Delivery in standard packaging units of 5 - 10 - 20 - 50 - 100 units, depending on customer requirements.

FITTING TOOLS AS MOUNTING AUXILIARIES

Trimming device
Device for the precise trimming of guide rings (PTFE 40/177024, bronze-filled) up to a length of 1000 mm (corresponds to approx. 320 mm piston or rod diameter). Five different cutting angles are available. A step-cutting blade is available on request.

Order No.: 507228

Fitting tongs for rod seals made of polyurethane

Order No.: 375753

All fitting devices are supplied with a documentation (work instructions).

Complete toolkits for fitting the seals are available. Please ask for our "complete cylinder service".

Tool for rod seals

On enquiry.

Tool for rod seals for small diameters without axial access

We require a dimensioned installation drawing for delivery.

Tool for piston seals

On enquiry.

MERKEL BONDING SET RK 15

Bonding set for Simmerrings without metal insert, for easy and secure installation in open fitting.

Freudenberg Sealing Technologies GmbH
Höhnerweg 2–4
69469 Weinheim
Germany

www.fst.com